HONDA

90

MODEL CL90

1

PARTS LIST

HONDA GENUINE PARTS

HONDA
GENUINE PARTS

Contents

ENGINE GROUP

Ref. No.	Nomenclature	Page
E- 1	Cylinder • Cylinder Head	2
E- 2	Crankshatf	4
E- 3	Camshaft • Valve	6
E- 4	Cam Chain • Cam Chain Tensioner	8
E- 5	Crankcase • Cylinder Stud	10
E- 6	Clutch	12
E- 7	Transmission	14
E- 8	Gear Change	16
E- 9	Right Crankcase Cover • Oil Pump	18
E-10	Gear Shift	22
E-11	Left Crankcase Cover • Dynamo	24
E-12	Contact Breaker • Advancer	26
E-13	Carburetor	28

FRAME GROUP

F- 1	Steering Handle	32
F- 2	Front Fork	34
F- 3	Steering Stem • Front Fender	36
F- 4	Fuel Tank	38
F- 5	Frame Body	40
F- 6	Air Cleaner • Seat	42
F- 7	Stand • Step	44
F- 8	Exhaust Muffler	46
F- 9	Tool	48
F-10	Rear Fork • Rear Fender	50
F-11	Rear Cushion	54
F-12	Front Wheel	56
F-13	Rear Wheel	58
F-14	Head Light • Tail Light	62
F-15	Winker	66
F-16	Winker Switch • Dimmer Switch	68
F-17	Wire Harness • Battery	70

APPLICATION OF PARTS LIST

This is a list of parts used of Honda 90 Model CL90.

1. How to see the Part Number

The composition of part number is as follows:

(Example)

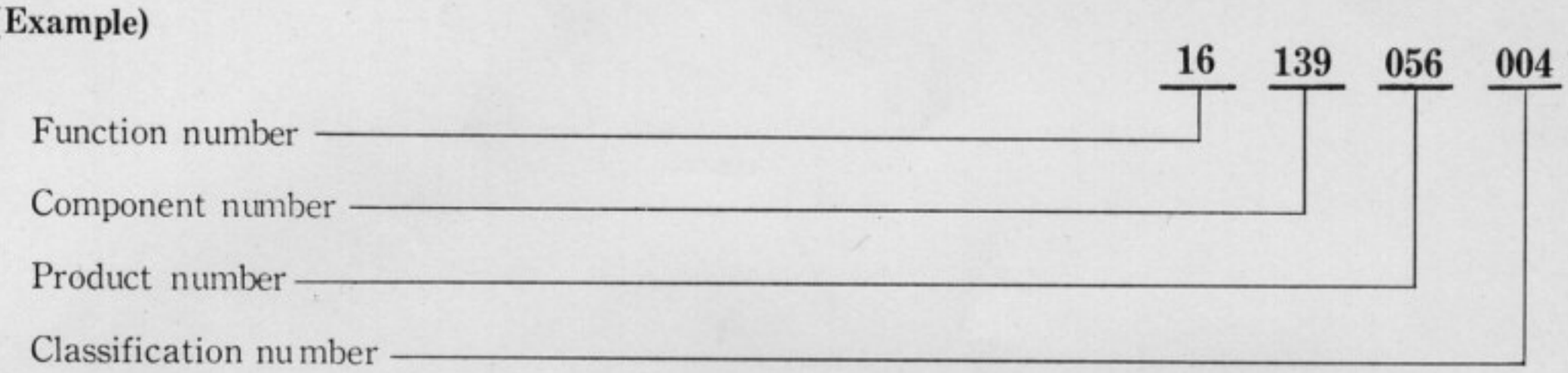

2. How to order the Parts

When ordering parts to us, please let us know the correct number of the parts, referring to this Parts List.

When changing parts, check the frame number, then the parts used can be found. The frame number is stamped on the left hand side of the frame body.

3. About the News Number

News Number is the same as the Parts News issued by Honda Service Center. When you need to know the contents of modified parts and related in detail.

4. This Parts List can be revised with Revision Sheet

For the future modification of parts and parts to be provided "Revision Sheet" will be issued every three months. Please do put the Revision Sheet in the place of each page according to instructions shown under the sheet. If you make sure of this, the Parts List will be kept always up-to-date.

5. This Parts List was compiled at 5th January, 1967.

HONDA MOTOR CO., LTD.

SERVICE CENTER

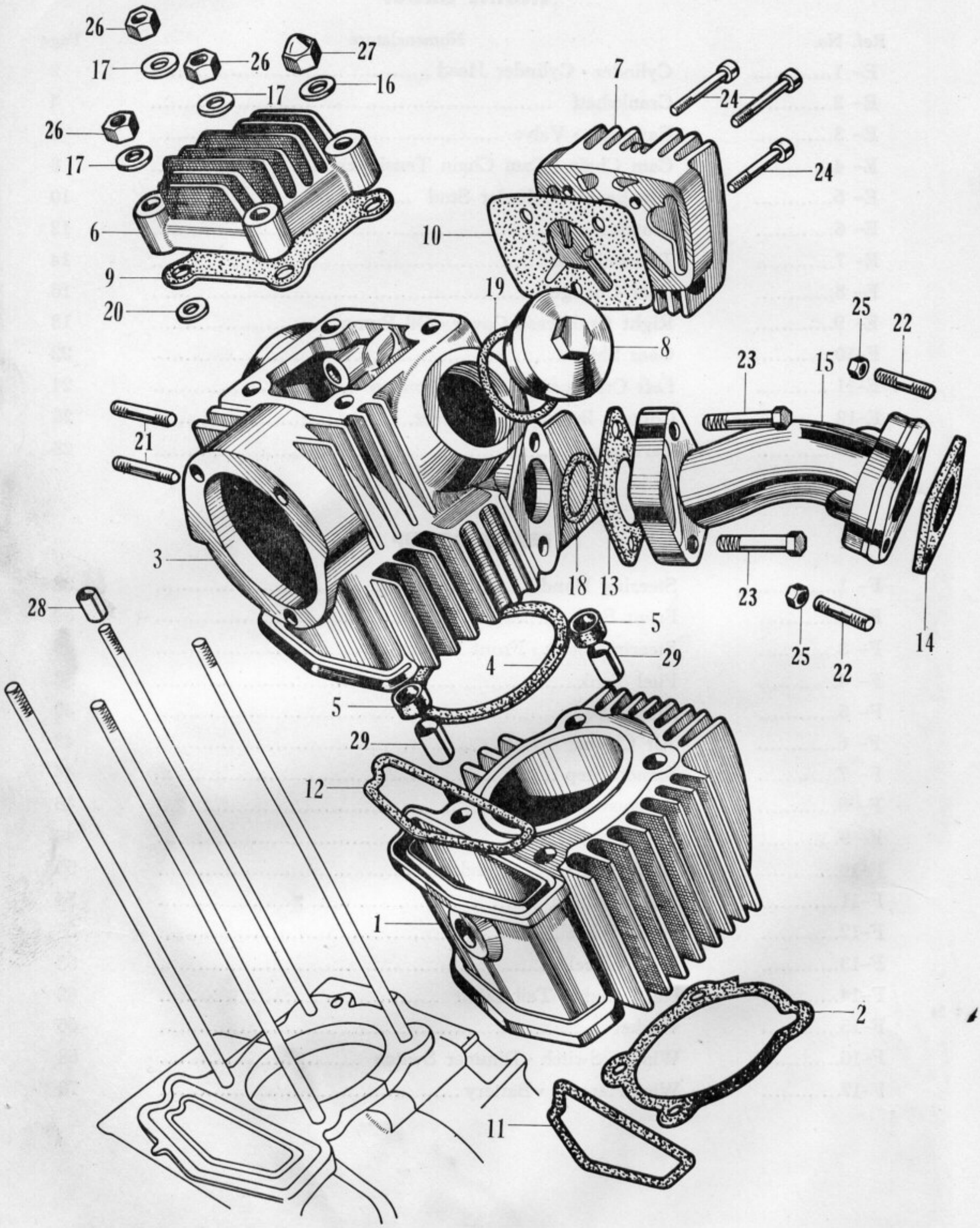
26
17
26
27
16
17
26
17
6
9
20
7
24
24
10
19
8
25
22
23
15
21
3
18
13
23
14
28
5
29
25
22
4
5
29
12
1
2
11

HONDA

E-1 Cylinder·Cylinder Head

Ref. No.	Part No.	Description	No. Reqd.	No. Used on From	No. Used on To	News No.
1	12100-028-120	CYLINDER	1	L90-106956		
2	12191-028-020	GASKET, cylinder	1	L90-106956		
3	12200-028-090	HEAD, cylinder	1	L90-106956		
4	12251-028-030	GASKET, cylinder head	1	L90-106956		
5	12261-028-000	GASKET, cylinder stud	2	L90-106956		
6	12301-028-000	COVER, cylinder head	1	L90-106956		
7	12331-028-010	COVER, side, rocker arm	1	L90-106956		
8	12361-028-000	CAP, tappet adjusting hole	2	L90-106956		
9	12391-028-000	GASKET, cylinder head cover	1	L90-106956		
10	12394-028-010	GASKET, rocker arm side cover	1	L90-106956		
11	12901-028-020	GASKET A, cam chain chamber	1	L90-106956		
12	12902-028-020	GASKET B, cam chain chamber	1	L90-106956		
13	16201-028-000	GASKET, carburetor	1	L90-106956		
14	16211-028-000	INSULATOR, carburetor	1	L90-106956		
	16212-046-000	INSULATOR, inlet pipe	1	L90-106956		
15	17111-056-000	PIPE, inlet	1	L90-106956		
	17119-046-000	GASKET, inlet pipe	1	L90-106956		
16	90441-259-000	WASHER, sealing, 8 mm	1	L90-106956		
17	90483-028-000	WASHER, 8 mm	3	L90-106956		
18	91301-028-000	O RING, 27×2	1	L90-106956		
19	91302-028-000	O RING 33.5×3	2	L90-106956		
20	91304-028-000	O RING, 7.2×2.2	1	L90-106956		
21	92712-06030	STUD, 6×30	2			
22	92700-06034	STUD, 6×34	2			
23	92000-06028	BOLT, hex., 6×28	2			
24	93500-05020	SCREW, cross., 5×20	3			
25	94001-06000	NUT, hex., 6 mm	2			
26	94001-08000	NUT, hex., 8 mm	3			
27	94021-08000	NUT, blind, 8 mm	1			
28	94301-10160	PIN, knock, 10×16	2			
29	94301-10200	PIN, knock, 10×20	2			
	94302-04080	PIN, knock, 4×8	1			

Ref. No.	Part No.	Description	No. Reqd.	No. Used on From	No. Used on To	News No.
	13000-028-030	CRANKSHAFT ASSY.	1	L90-106956		
1	13010-028-020	RING-SET, piston (S.T.D.)	1	L90-106956		
	13020-028-020	RING-SET, piston (0.25)	1	L90-106956		
	13030-028-020	RING-SET, piston (0.50)	1	L90-106956		
	13040-028-020	RING-SET, piston (0.75)	1	L90-106956		
	13050-028-020	RING-SET, piston (1.00)	1	L90-106956		
2	13101-028-050	PISTON, (S.T.D.)	1	L90-106956		
	13102-028-050	PISTON, (0.25)	1	L90-106956		
	13103-028-050	PISTON, (0.50)	1	L90-106956		
	13104-028-050	PISTON, (0.75)	1	L90-106956		
	13105-028-050	PISTON, (1.00)	1	L90-106956		
3	13111-221-000	PIN, piston	1	L90-106956		
4	13115-200-000	CLIP, piston pin	2	L90-106956		
5	13201-216-000	ROD, connecting	1	L90-106956		
6	13211-028-000	RETAINER, roller	1	L90-106956		
7	13310-028-060	CRANKSHAFT, right	1	L90-106956		
8	13321-028-060	CRANKSHAFT, left	1	L90-106956		
9	13381-028-000	PIN, crank	1	L90-106956		
10	14311-028-010	SPROCKET, timing	1	L90-106956		
11	22911-028-000	COLLAR, 20 mm	1	L90-106956		
12	90741-253-000	KEY, woodruff, 4 mm	1	L90-106956		
13	90811-030-000	PLUG, crank pin sealing	1	L90-106956		
14	91101-001-030	ROLLER, 2.5×10	24	L90-106956		
15	96100-63050	BEARING, ball, 6305	2			

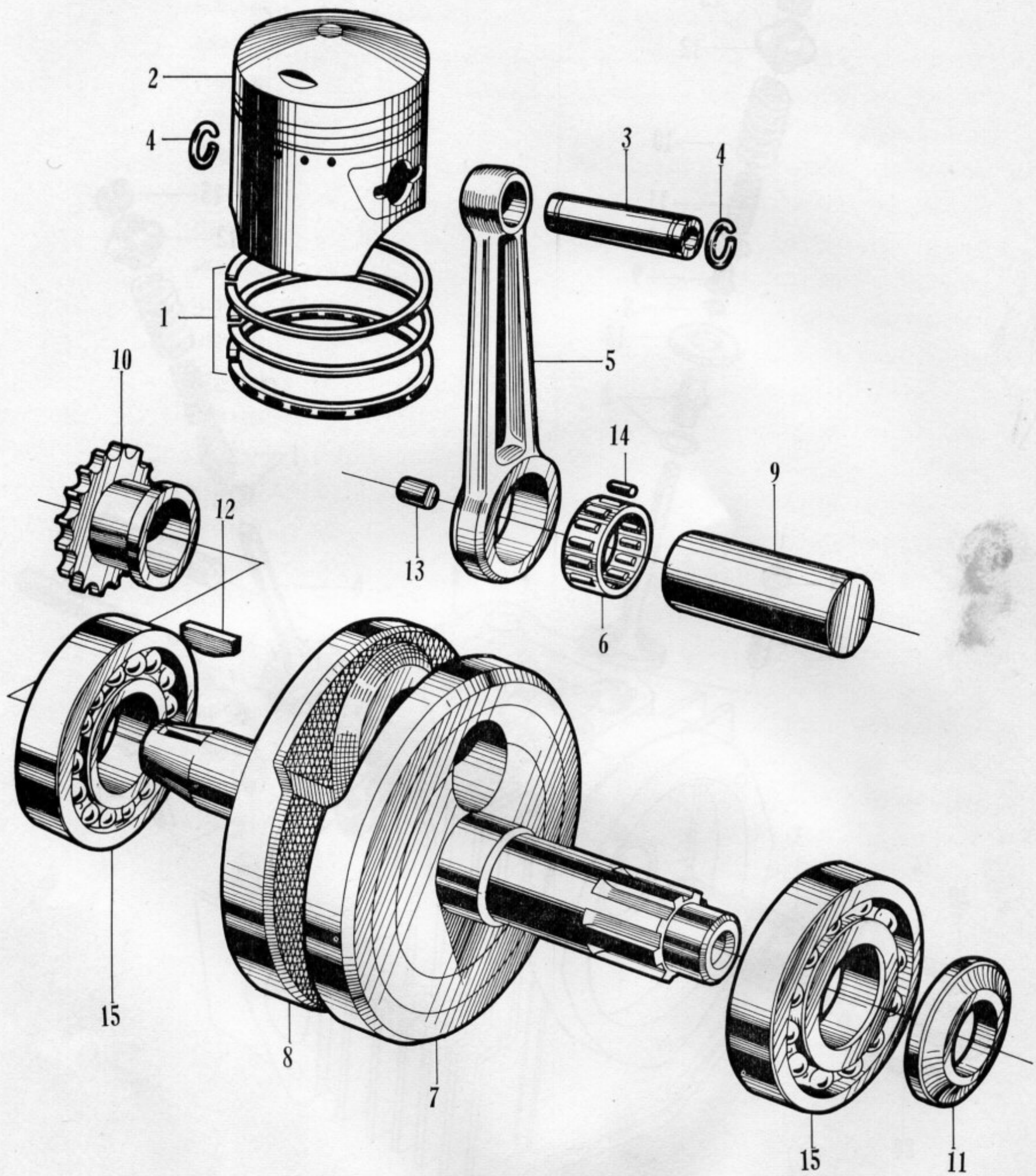
2
4
3
4
1
5
10
14
9
12
13
6
15
8
7
15
11

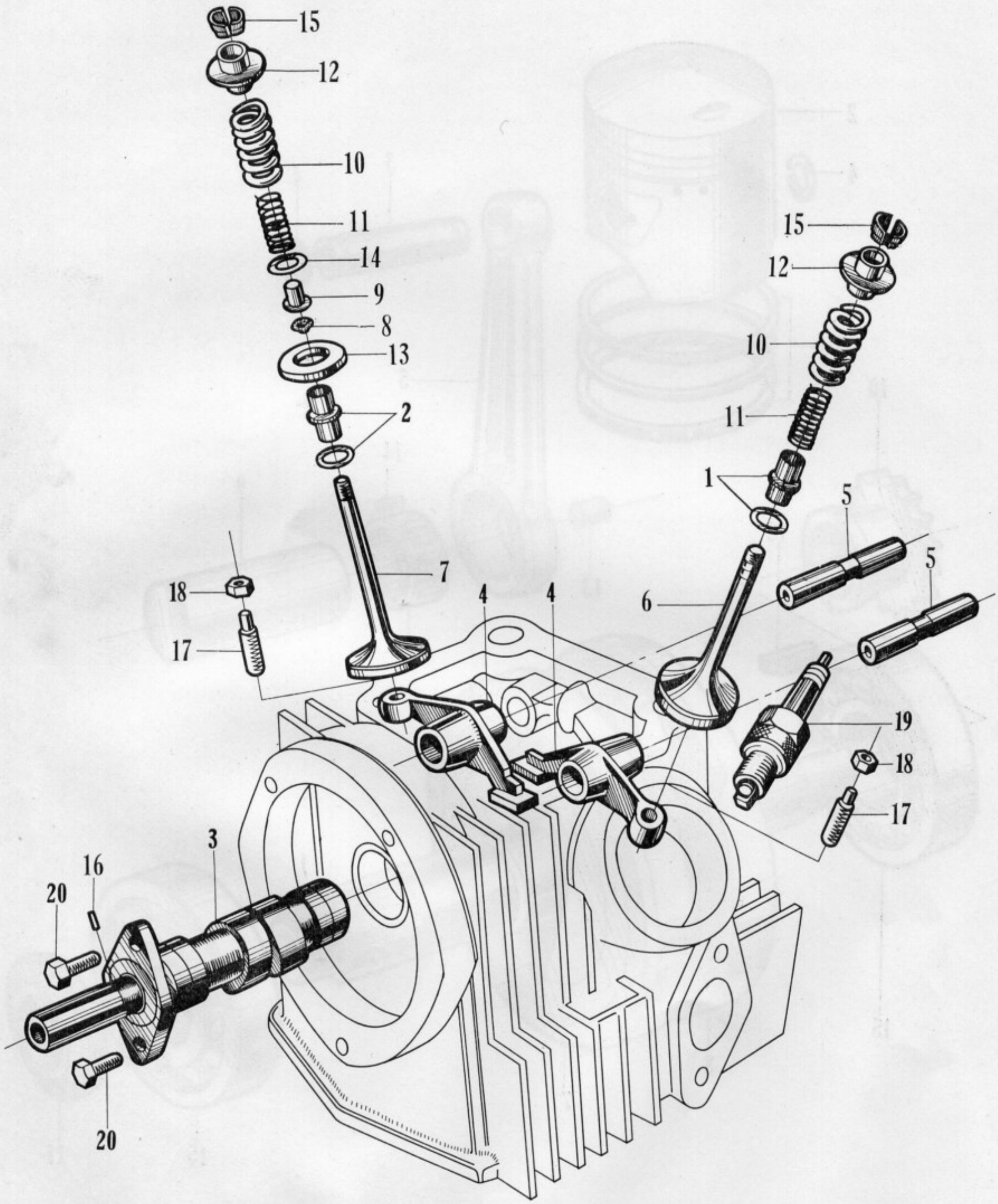
15
12
10
11
14
9
8
13
2
7
18
17
4
4
6
15
12
10
11
1
5
5
19
18
17
3
16
20
20

Ref. No.	Part No.	Description	No. Reqd.	No. Used on From	No. Used on To	News No.
1	12021-028-340	GUIDE, inlet valve	1	L90-106956		
2	12023-028-330	GUIDE, exhaust valve	1	L90-106956		
3	14101-028-000	CAMSHAFT	1	L90-106956		
4	14431-028-010	ARM, valve rocker	2	L90-106956		
5	14451-028-010	SHAFT, inlet rocker arm	2	L90-106956		
6	14711-028-000	VALVE, inlet	1	L90-106956		
7	14721-028-600	VALVE, exhaust	1	L90-106956		
8	14730-028-000	SEAL, valve stem	1	L90-106956		
9	14731-028-000	CAP, valve stem seal	1	L90-106956		
10	14751-028-010	SPRING, outer, valve	2	L90-106956		
11	14761-028-020	SPRING, inner, valve	2	L90-106956		
12	14771-030-000	RETAINER	2	L90-106956		
13	14775-028-010	SEAT, valve spring	1	L90-106956		
14	14776-028-000	SEAT, inner valve spring	1	L90-106956		
15	14781-001-010	COTTER, valve	4	L90-106956		
16	30905-216-000	PIN, knock, 3×5.2	1	L90-106956		
17	90012-200-000	SCREW, tappet adjusting	2	L90-106956		
18	90206-001-000	NUT, tappet adjusting	2	L90-106956		
19	98066-56713	PLUG, sparking	1			
	98066-56723	PLUG, sparking	1			
20	92000-06010	BOLT, hex., 6×10	2			

Ref. No.	Part No.	Description	No. Reqd.	No. Used on From	No. Used on To	News No.
1	14321-028-000	SPROCKET, cam	1	L90-106956		
2	14401-028-000	CHAIN, cam	1	L90-106956		
3	14500-028-000	TENSIONER, cam chain	1	L90-106956		
4	14541-028-020	SPRING, tensioner	1	L90-106956		
5	14552-028-020	ROD, tensioner push	1	L90-106956		
6	14561-028-010	RUBBER, tensioner cushion	1	L90-106956		
	14565-028-000	RETAINER, cushion rubber	1	L90-106956		
7	14591-035-000	STRAINER, oil damper	1	L90-106956		
8	14592-028-010	PLATE A, tensioner setting	1	L90-106956		
9	14593-028-010	PLATE, tensioner setting	2	L90-106956		
10	14610-028-010	ROLLER, cam chain guide	1	L90-106956		
11	14615-035-010	PIN, cam chain guide roller	1	L90-106956		
12	14670-028-000	SPROCKET, cam chain guide	1	L90-106956		
13	90009-028-000	BOLT, tensioner adjusting	1	L90-106956		
14	90081-035-000	BOLT, sealing, 14 mm	1	L90-106956		
15	90441-035-000	WASHER, sealing, 14 mm	1	L90-106956		
16	91303-028-000	O RING, 4×2.2	1	L90-106956		
17	91304-028-000	O RING, 15×2.5	1	L90-106956		
18	92000-05010	BOLT, hex., 50×10	3			
19	94002-06000	NUT, thin, 6 mm	1			
20	94101-06000	WASHER, flat, 6 mm	1			

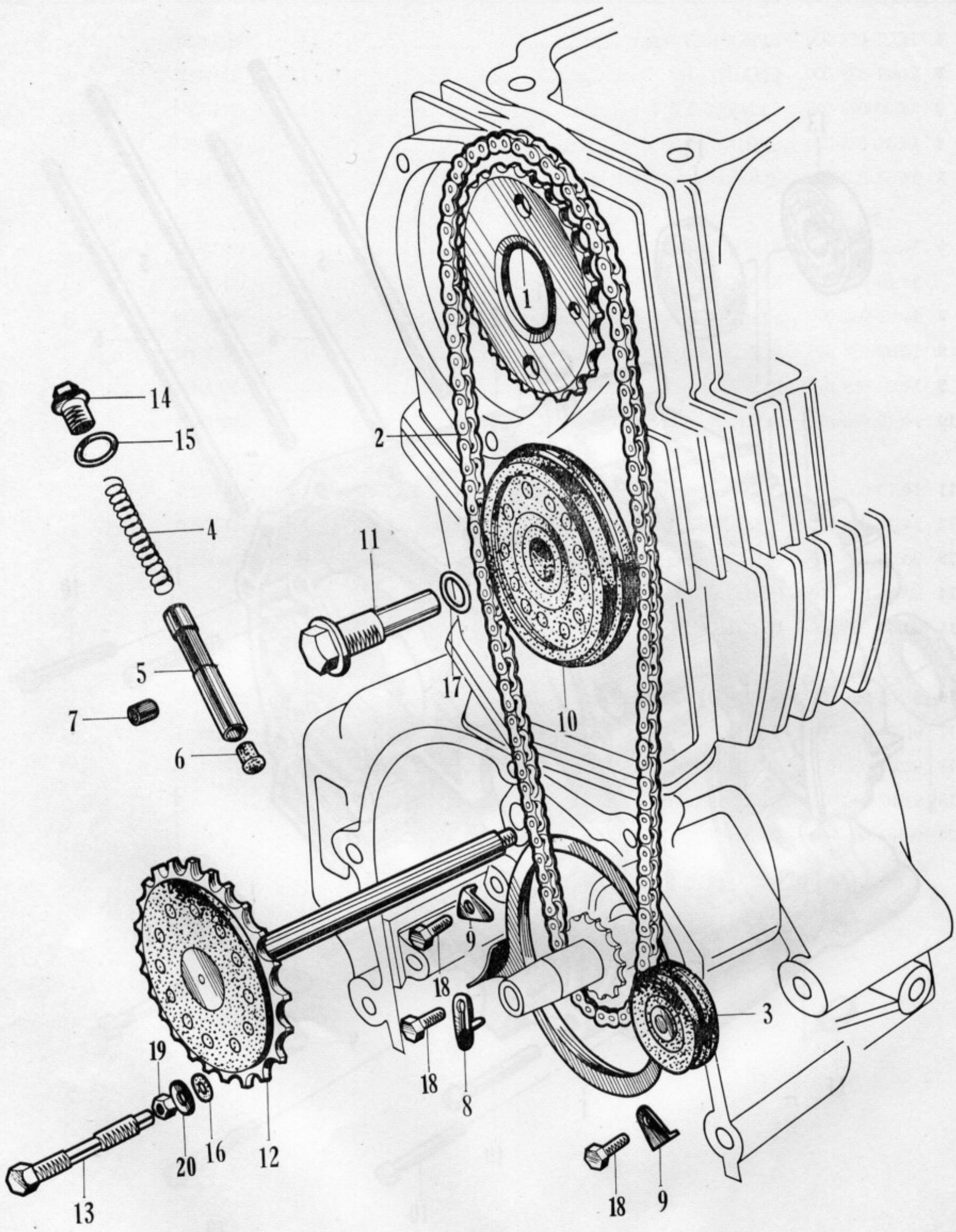
1
2
3
4
5
6
7
8
9
10
11
12
13
14
15
16
17
18
19
20

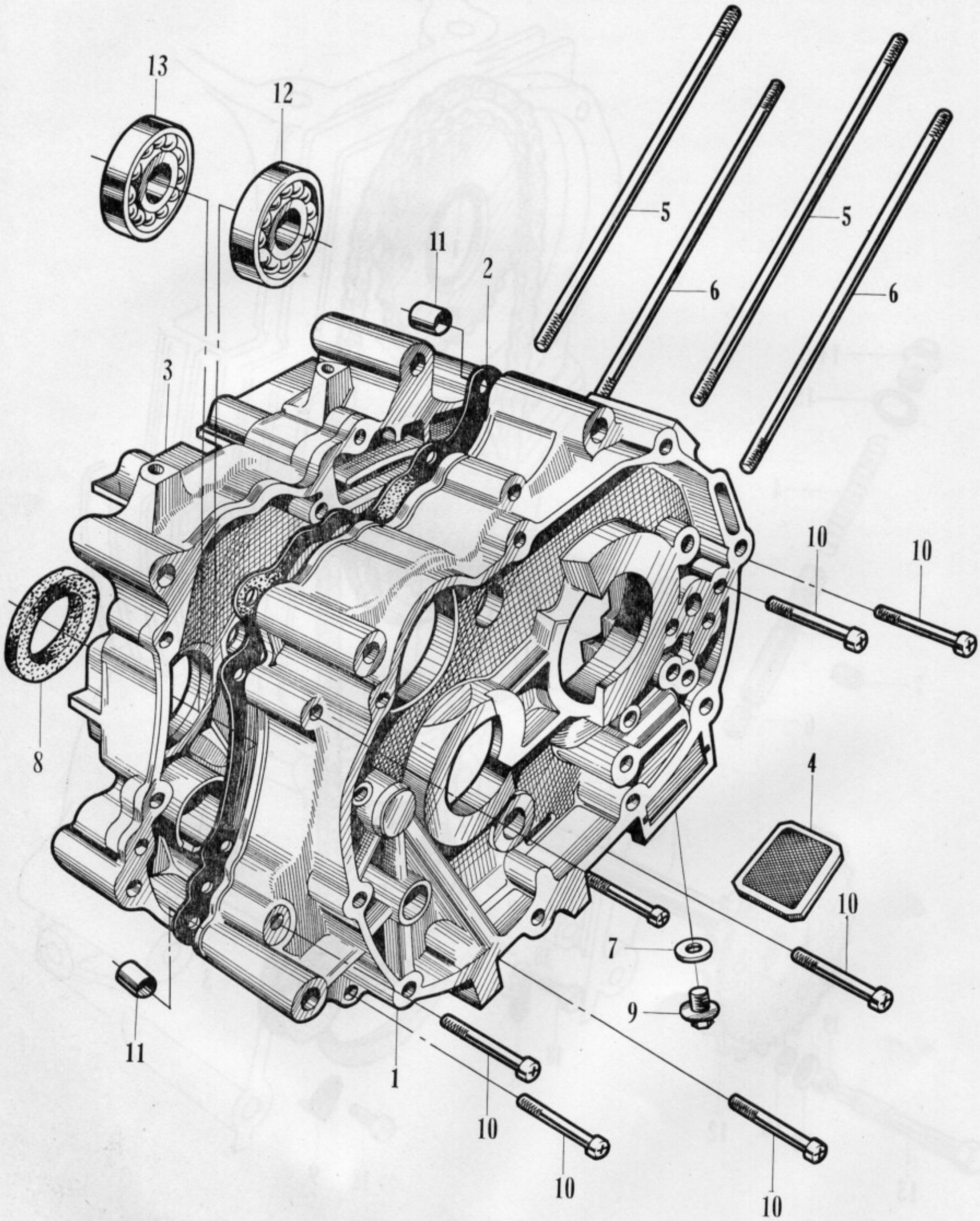
13
12
5
5
11
2
6
6
3
10
10
8
4
10
7
9
11
1
10
10
10

E-5 Crankcase·Cylinder Stud

Ref. No.	Part No.	Description	No. Reqd.	No. Used on From	No. Used on To	News No.
1	11100-028-090	CRANKCASE, right	1	L90-106956		
2	11191-028-040	GASKET, crankcase	1	L90-106956		
3	11200-028-110	CRANKCASE, left	1	L90-106956		
	15416-028-000	COVER, oil strainer	1	L90-106956		
4	15421-035-010	SCREEN, oil filter	1	L90-106956		
	15439-028-000	GASKET, oil strainer cover	1	L90-106956		
5	90031-028-010	STUD A, cylinder	2	L90-106956		
6	90032-028-010	STUD B, cylinder	2	L90-106956		
7	90407-200-000	PACKING, drain cock	1	L90-106956		
8	91201-030-000	OIL-SEAL, 20-34-7	1	L90-106956		
9	92800-12000	BOLT, drain cock	1			
10	93500-06040	SCREW, cross., 6×40	9			
11	94301-10160	PIN, knock, 10×16	2			
12	96100-60040	BEARING, ball, 6004	1			
13	96100-62040	BEARING, ball, 6204	1			

Ref. No.	Part No.	Description	No. Reqd.	No. Used on From	No. Used on To	News No.
1	22101-028-010	OUTER, clutch	1	L90-106956		
2	22111-028-010	COVER, clutch outer	1	L90-106956		
3	22112-028-000	GASKET, clutch outer cover	1	L90-106956		
4	22115-030-000	PLATE, oil filter	1	L90-106956		
5	22131-028-000	GUIDE, clutch center	1	L90-106956		
6	22201-030-030	DISK, friction	2	L90-106956		
7	22311-030-000	PLATE A, clutch	1	L90-106956		
8	22321-030-000	PLATE B, clutch	1	L90-106956		
9	22401-030-000	SPRING, clutch	4	L90-106956		
10	22421-001-000	SPRING, clutch damper	4	L90-106956		
11	22511-028-000	PLATE, drive	1	L90-106956		
12	22831-028-000	LIFTER, clutch	1	L90-106956		
13	22901-028-000	SET-RING, 102.5 mm	1	L90-106956		
14	23110-028-000	GEAR, primary driven	1	L90-106956		
15	23111-030-000	GEAR, drive	1	L90-106956		
16	25551-028-000	OIL THROUGH	1	L90-106956		
17	25555-028-000	SPRING, oil through	1	L90-106956		
18	90231-030-000	NUT, lock, 16 mm	1	L90-106956		
19	90431-030-000	WASHER, lock, 16 mm	1	L90-106956		
20	93500-05012	SCREW, cross., 5×12	2			
21	94510-20120	CIR-CLIP, 20 mm	1			
22	96100-60000	BEARING, radial ball, 6000	1			

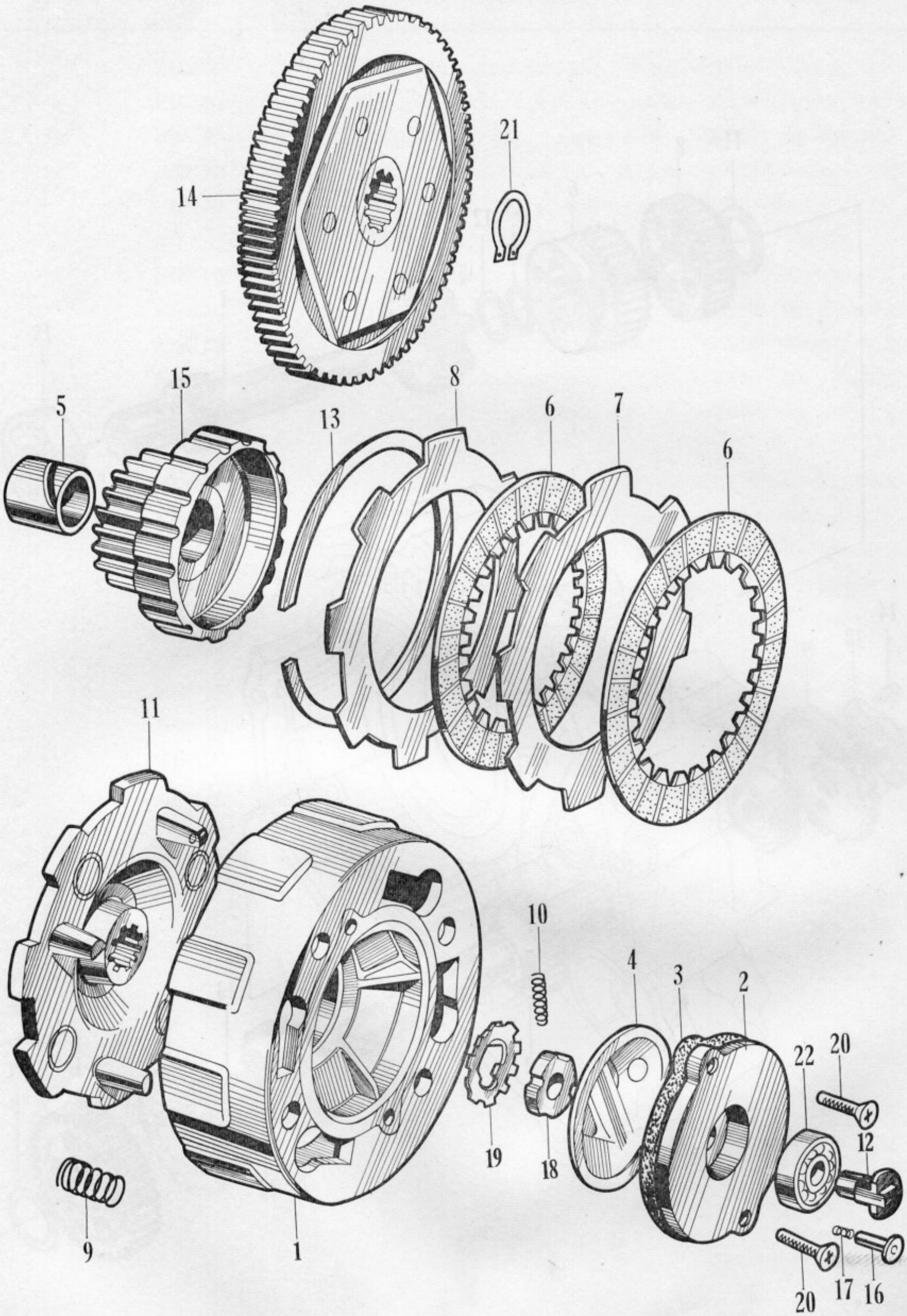
21
14
15
5
8
13
6
7
6
11
10
4
3
2
22
20
12
19
18
9
1
20
17
16

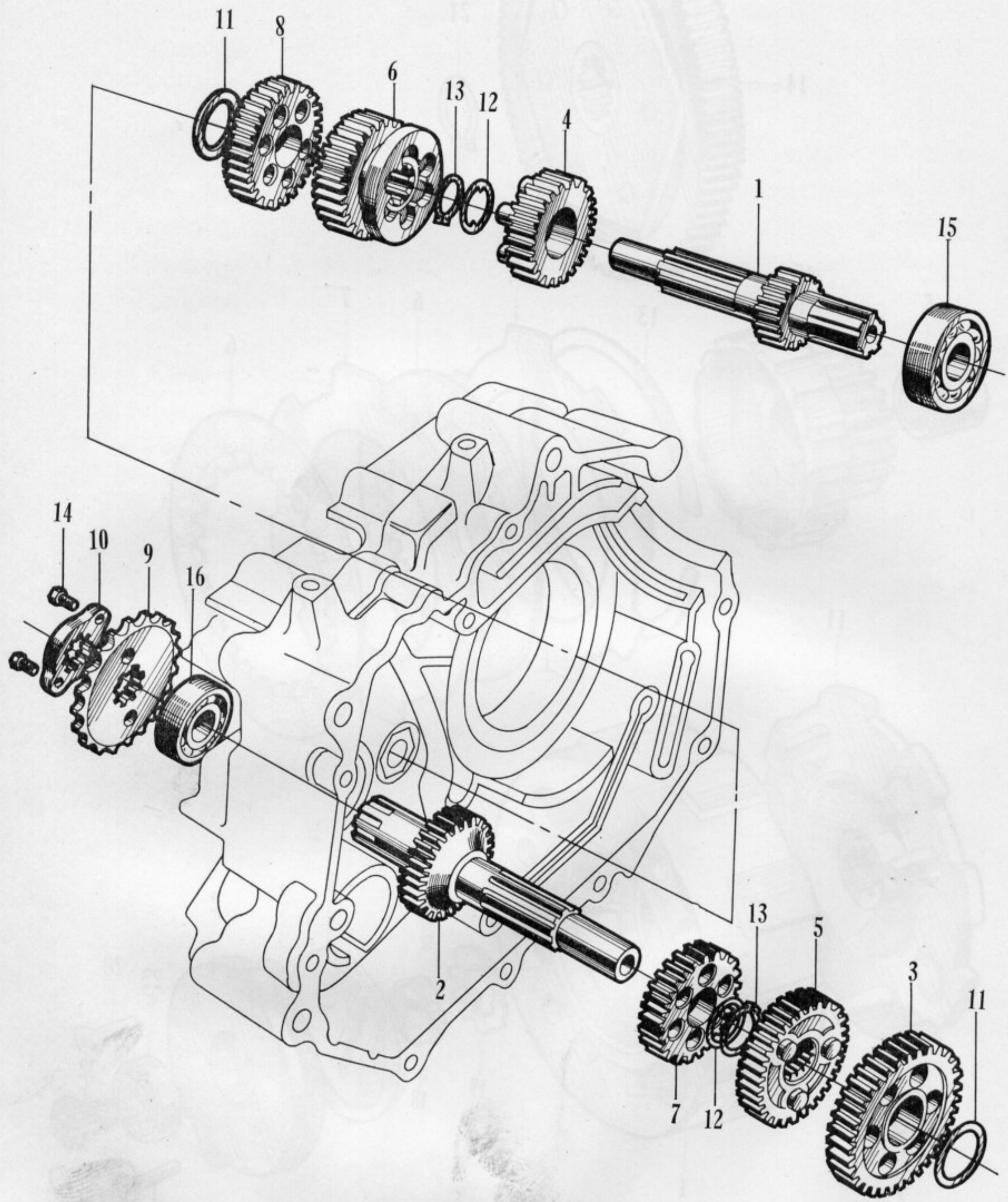
11
8
6
13
12
4
1
15
14
10
9
16
2
13
5
3
11
7
12

E-7 Transmission

Ref. No.	Part No.	Description	No. Reqd.	No. Used on From	No. Used on To	News No.
1	23211-028-030	SHAFT, main, transmission	1	L90-106956		
2	23221-052-000	SHAFT, counter, transmission	1	L90-106956		
3	23421-028-000	GEAR, low, counter shaft	1	L90-106956		
4	23431-052-000	GEAR, second, main shaft	1	L90-106956		
5	23441-052-010	GEAR, second, counter shaft	1	L90-106956		
6	23451-052-000	GEAR, third, main shaft	1	L90-106956		
7	23461-052-000	GEAR, third, counter shaft	1	L90-106956		
8	23471-052-000	GEAR, top, main shaft	1	L90-106956		
9	23801-028-000	SPROCKET, drive (14 T)	1	L90-106956		
10	23811-206-000	PLATE, drive sprocket fixing	1	L90-106956		
11	90451-001-000	WASHER, thrust, 14 mm	2	L90-106956		
12	90461-028-000	WASHER, spline, 18 mm	2	L90-106956		
13	90601-030-000	CIR-CLIP, 18 mm	2	L90-106956		
14	92000-06010	BOLT, hex., 6×10	2			
15	96100-60040	BEARING, ball, 6004	1			
16	96100-62040	BEARING, ball, 6204	1			

Ref. No.	Part No.	Description	No. Reqd.	No. Used on From	No. Used on To	News No.
1	24430-028-601	STOPPER, shift drum	1	L90-106956		
2	24435-001-020	SPRING, shift drum stopper	1	L90-106956		
3	24610-028-010	SPINDLE, gear shift	1	L90-106956		
4	24641-028-000	SPRING, gear shift arm	1	L90-106956		
5	24651-028-000	SPRING, gear shift return	1	L90-106956		
6	24652-028-000	PIN, shift return spring	1	L90-106956		
7	28211-028-000	PINION, kick starter	1	L90-106956		
8	28214-030-000	SPRING, kick starter paul	1	L90-106956		
9	28222-030-000	PAUL, kick starter ratchet	1	L90-106956		
10	28224-028-000	GUIDE, kick starter ratchet	1	L90-106956		
11	28251-028-000	SPINDLE, kick starter	1	L90-106956		
12	28261-028-000	SPRING, kick starter	1	L90-106956		
13	90023-028-600	PIVOT, shift drum stopper arm	1	L90-106956		
14	90451-001-000	WASHER, thrust, 14 mm	2	L90-106956		

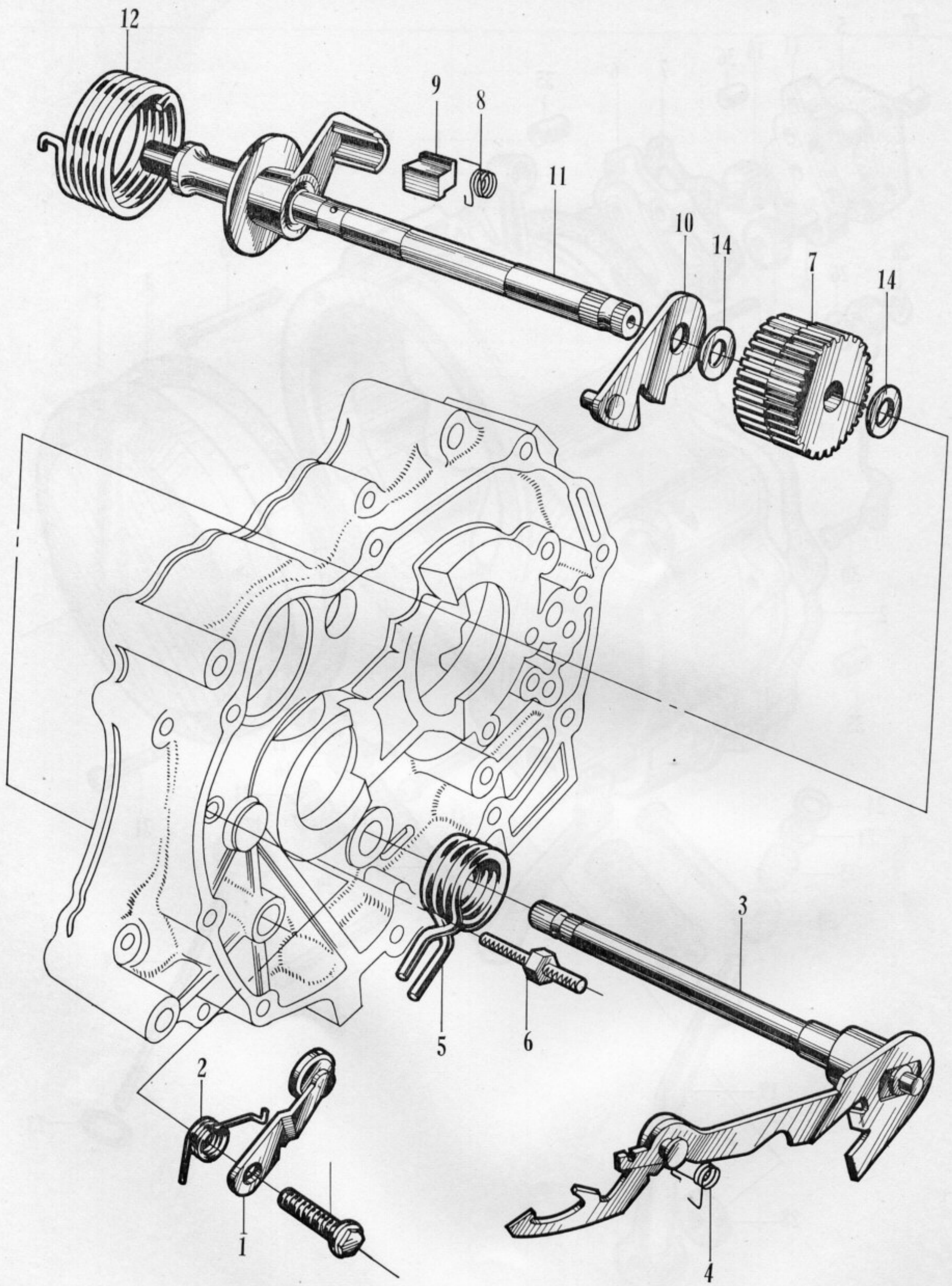
12
9
8
11
10
14
7
14
3
5
6
2
1
4

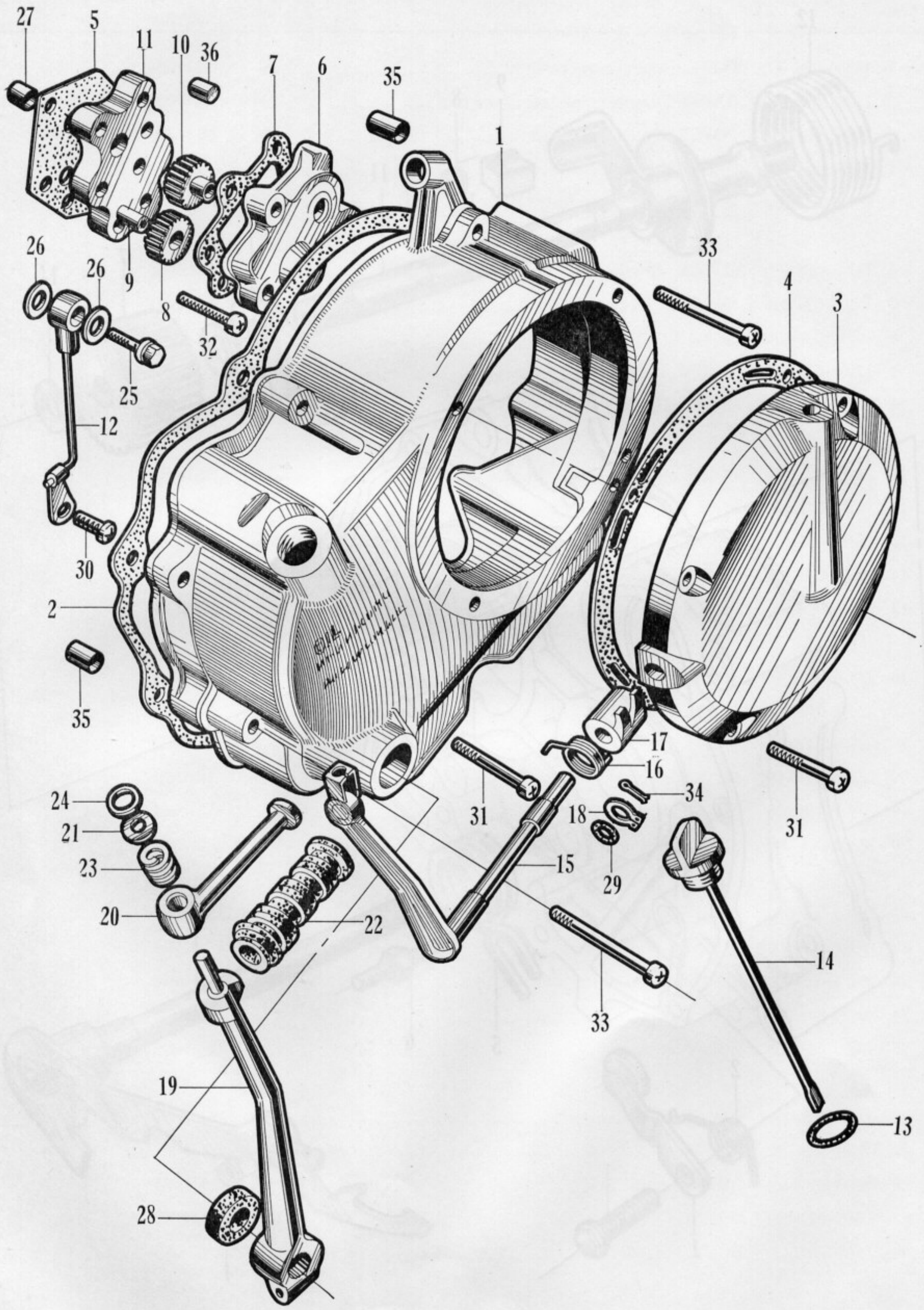
27
5
11
10
36
7
6
35
1
26
26
9
8
32
33
4
3
25
12
30
2
35
17
16
34
24
21
23
20
22
31
18
29
31
15
14
33
19
13
28

E-9 Right Crankcase Cover·Oil Pump

Ref. No.	Part No.	Description	No. Reqd.	No. Used on From	No. Used on To	News No.
1	11330-056-000	COVER, right, crankcase	1	L90-106956		
2	11393-028-020	GASKET, right crankcase cover	1	L90-106956		
3	11650-028-010	COVER, clutch	1	L90-106956		
4	11692-028-000	GASKET, clutch cover	1	L90-106956		
5	15119-028-010	GASKET, oil pump body	1	L90-106956		
6	15121-028-030	COVER, oil pump	1	L90-106956		
7	15128-028-010	GASKET, oil pump cover	1	L90-106956		
8	15141-028-020	GEAR B, oil pump	1	L90-106956		
9	15161-028-020	SHAFT, oil pump driven gear	1	L90-106956		
10	15180-028-030	GEAR, oil pump drive	1	L90-106956		
11	15210-028-030	BODY, oil pump	1	L90-106956		
12	15510-028-000	PIPE, oil	1	L90-106956		
13	15619-001-000	PACKING, oil cap	1	L90-106956		
14	15650-056-000	GAUGE, oil level	1	L90-106956		
15	22810-028-000	LEVER, clutch	1	L90-106956		
16	22815-030-010	SPRING, clutch lever	1	L90-106956		
17	22834-030-000	ARM, clutch lifter	1	L90-106956		
18	22875-030-000	SNAP-RING, 10 mm	1	L90-106956		
	28300-056-000	ARM ASSY., kick starter	1	L90-106956		
19	28301-040-000	ARM, kick starter	1	L90-106956		
20	28302-001-000	PEDAL, kick starter	1	L90-106956		
21	28303-001-000	WASHER, kick starter knuckle	1	L90-106956		
22	28311-200-000	RUBBER, kick starter	1	L90-106956		
23	28322-001-000	SPRING, kick starter knuckle	1	L90-106956		
24	28324-001-000	CLIP, kick starter knuckle	1	L90-106956		
25	90015-028-000	BOLT, oil joint	1	L90-106956		
26	90405-001-000	PACKING, oil pipe joint	2	L90-106956		
27	90701-028-000	PIN, knock, 13×11	1	L90-106956		
28	91203-023-020	OIL-SEAL, 14-26-7	1	L90-106956		
29	91301-027-000	O RING, 4.8×1.9	1	L90-106956		
30	92000-06010	BOLT, hex., 6×10	1			

Ref. No.	Part No.	Description	No. Reqd.	No. Used on From	No. Used on To	News No.
31	93500-06020	SCREW, cross., 6×20	10			
32	93500-06025	SCREW, cross., 6×25	3			
33	93500-06040	SCREW, cross., 6×40	2			
34	94201-20150	PIN, cotter, 2.0 mm	1			
35	94301-10160	PIN, knock, 10×16	2			
36	94302-04065	PIN, knock, 4×6.5 B	1			

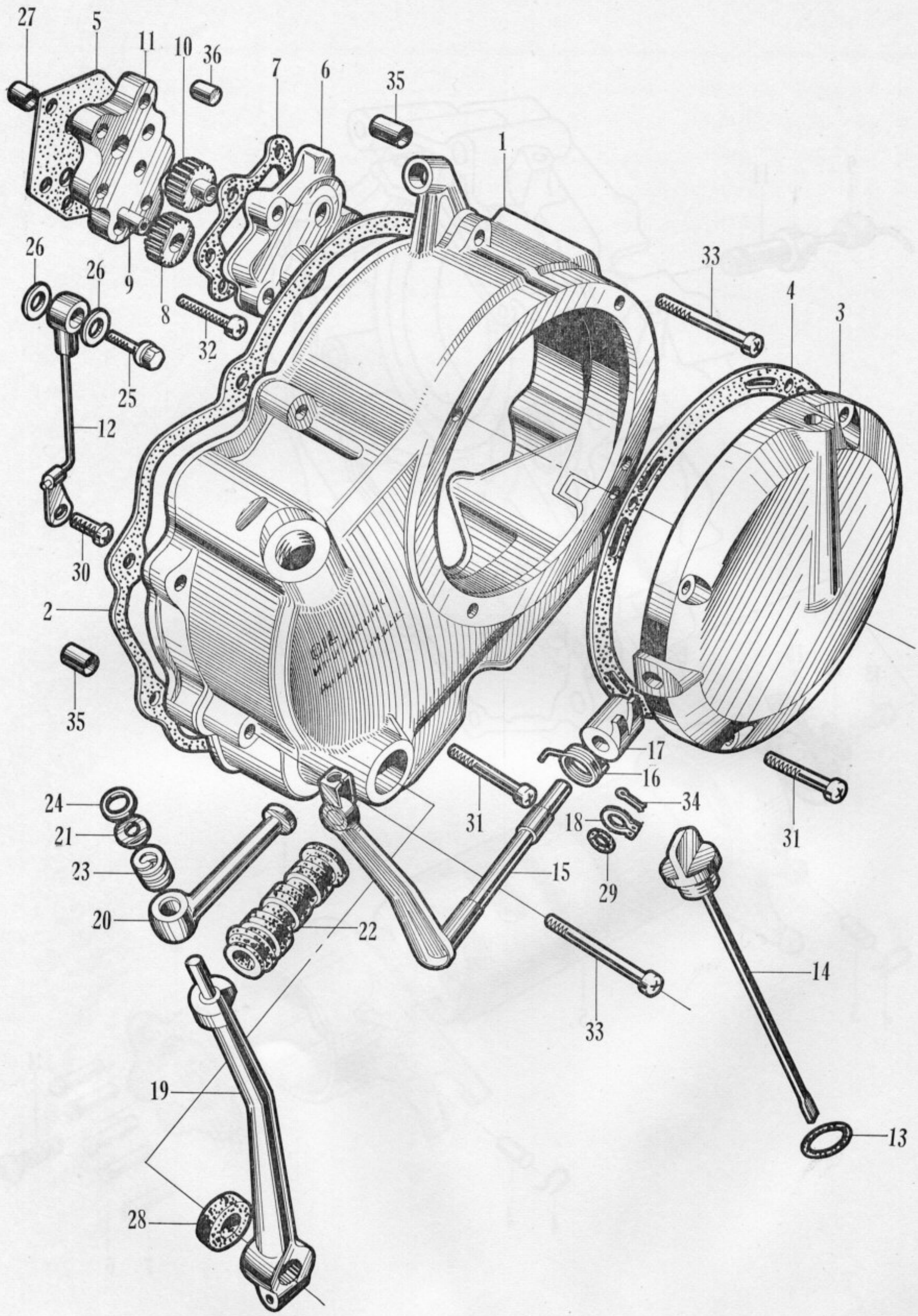
27
5
11
10
36
7
6
35
1
26
26
9
8
32
33
4
3
25
12
30
2
35
17
16
34
24
21
23
20
22
31
18
29
15
31
14
33
19
13
28

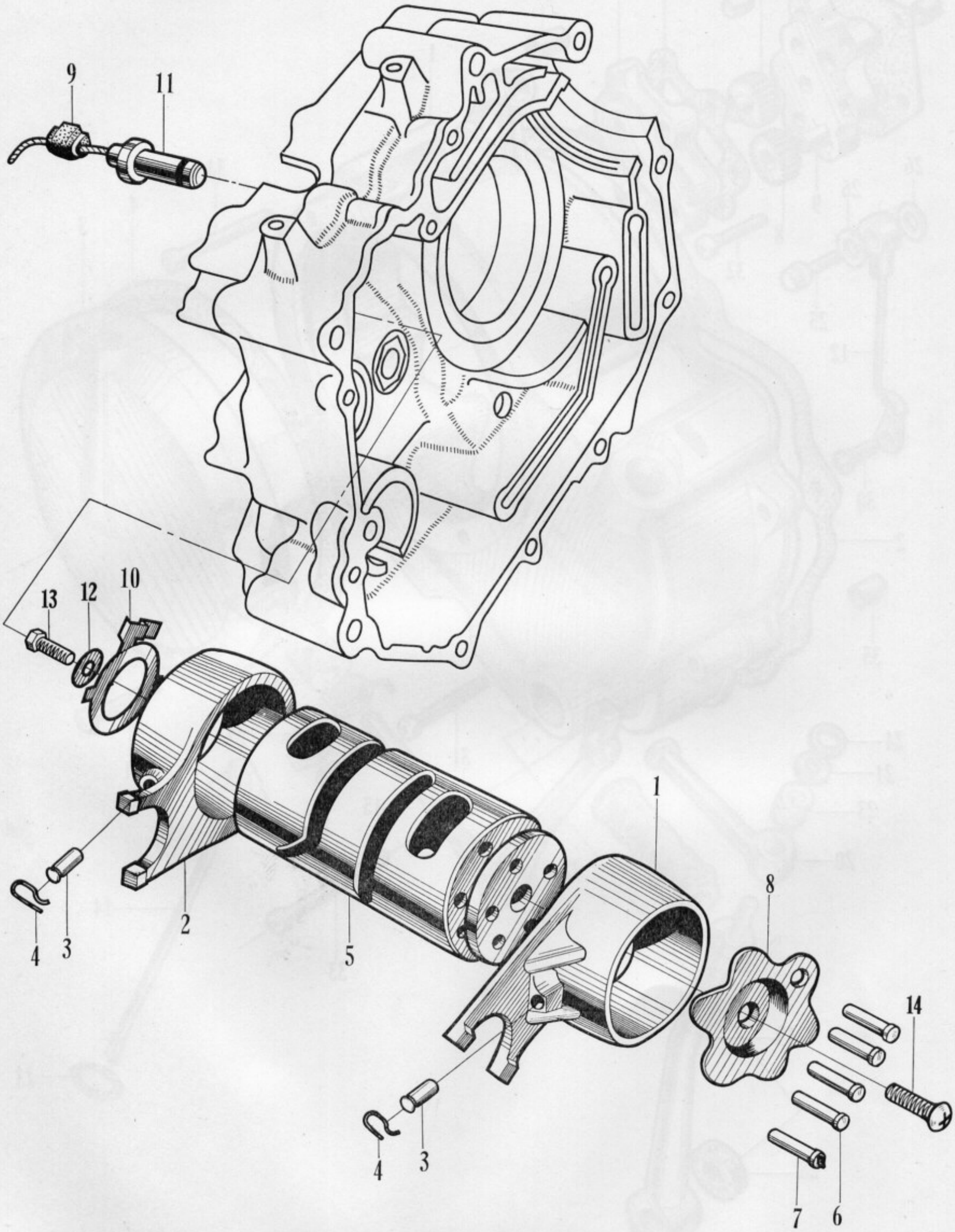
9
11
13
12
10
1
8
14
2
5
4
3
4
3
7
6

E-10 Gear Shift

Ref. No.	Part No.	Description	No. Reqd.	No. Used on From	No. Used on To	News No.
1	24211-028-040	FORK, right, gear shift	1	L90-106956		
2	24221-028-030	FORK, left, gear shift	1	L90-106956		
3	24261-028-010	PIN, gear shift fork guide	2	L90-106956		
4	24263-028-000	CLIP, shift fork guide pin	2	L90-106956		
5	24301-028-604	DRUM, gear shift	1	L90-106956		
6	24421-200-000	PIN, gear shift drum	4	L90-106956		
7	24423-028-000	PIN C, gear shift drum	1	L90-106956		
8	24434-028-601	PLATE, shift drum stopper	1	L90-106956		
9	32981-028-010	GROMMET, neutral switch cord	1	L90-106956		
10	35753-028-010	ROTOR, neutral switch	1	L90-106956		
11	35750-028-000	CONTACT, neutral switch	1	L90-106956		
	37551-001-000	O RING, 7×1.6	1	L90-106956		
12	90417-001-000	WASHER, side, shift drum	1	L90-106956		
13	92000-06016	BOLT, hex., 6×16	1			
14	93500-06016	SCREW, cross., 6×16	1			

Ref. No.	Part No.	Description	No. Reqd.	No. Used on From	No. Used on To	News No.
1	11341-028-030	COVER, left, crankcase	1	L90-106956		
2	11361-028-040	COVER, rear, left crankcase	1	L90-106956		
3	11394-028-020	GASKET, left crankcase cover	1	L90-106956		
4	11431-028-000	COVER, dynamo	1	L90-106956		
5	11661-028-010	COVER, drive sprocket	1	L90-106956		
6	11691-028-000	GASKET, dynamo cover	1	L90-106956		
7	24438-205-000	RUBBER, change pedal	1	L90-106956		
8	24700-028-670	PEDAL, gear change	1	L90-106956		
	31100-028-030	A.C.GENERATOR, rotor type	1	L90-106956		
9	31101-028-033	ROTOR	1	L90-106956		
	31101-028-034	ROTOR	1	L90-106956		
10	31102-028-033	STATOR	1	L90-106956		
	31102-028-034	STATOR	1	L90-106956		
11	31104-028-000	BOLT, generator rotor setting	1	L90-106956		
12	32971-028-000	GROMMET, generator cord	1	L90-106956		
13	91203-001-000	OIL-SEAL, 11.6-24-10	1	L90-106956		
14	91301-216-000	O RING, 5.5×1.5	3	L90-106956		
15	92000-06020	BOLT, hex., 6×20	1			
16	93500-06016	SCREW, cross., 6×16	1			
17	93500-06020	SCREW, cross., 6×20	3			
18	93500-06025	SCREW, cross., 6×25	9			
19	93500-06032	SCREW, cross., 6×32	1			
20	93700-0601802	SCREW, cross., 6×18	3			
21	94301-10160	PIN, knock, 10×16	1			

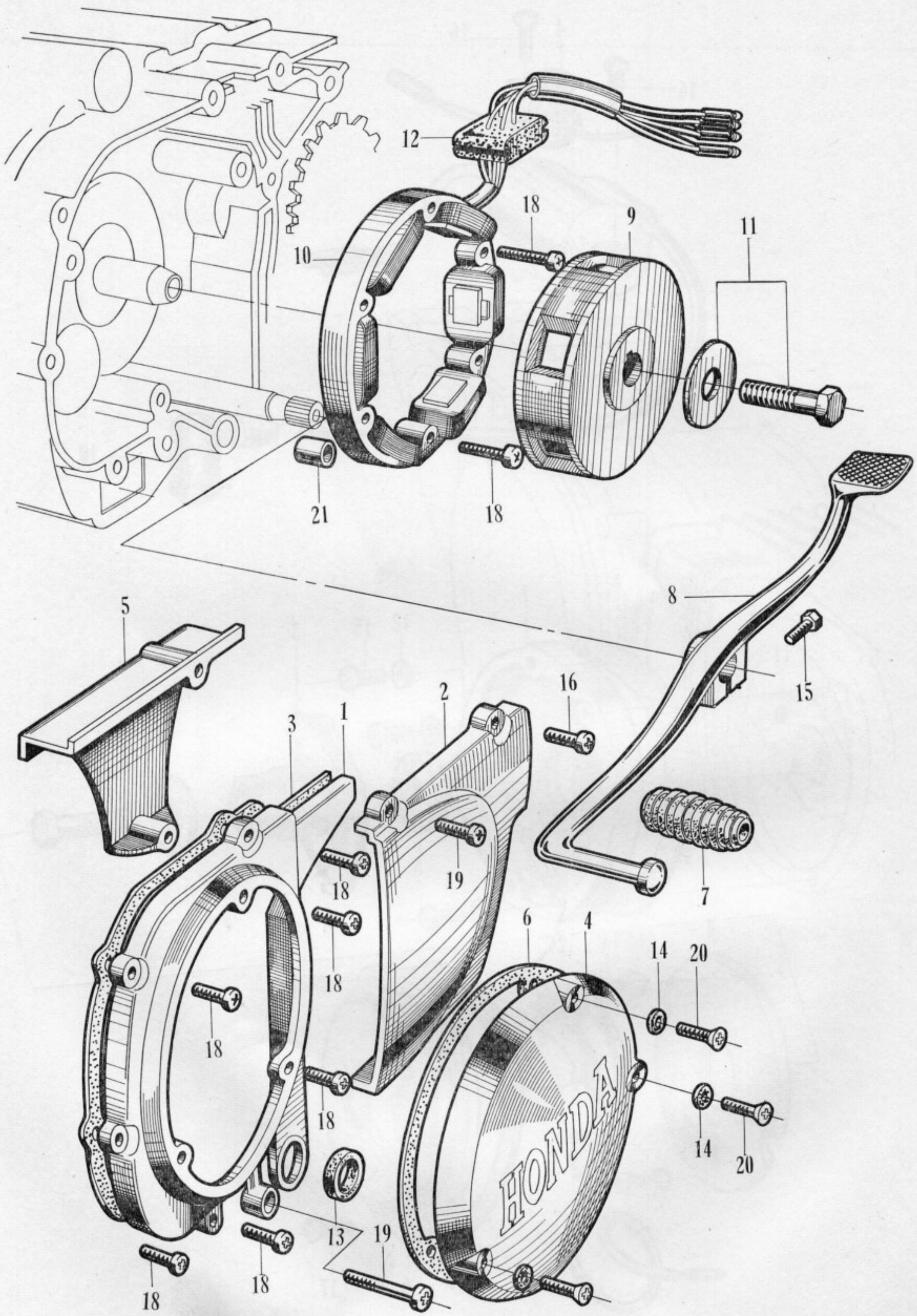
12
18
9
11
10
21
18
8
5
15
16
2
1
3
19
7
18
18
6
4
14
20
18
18
14
20
13
19
18
18
HONDA

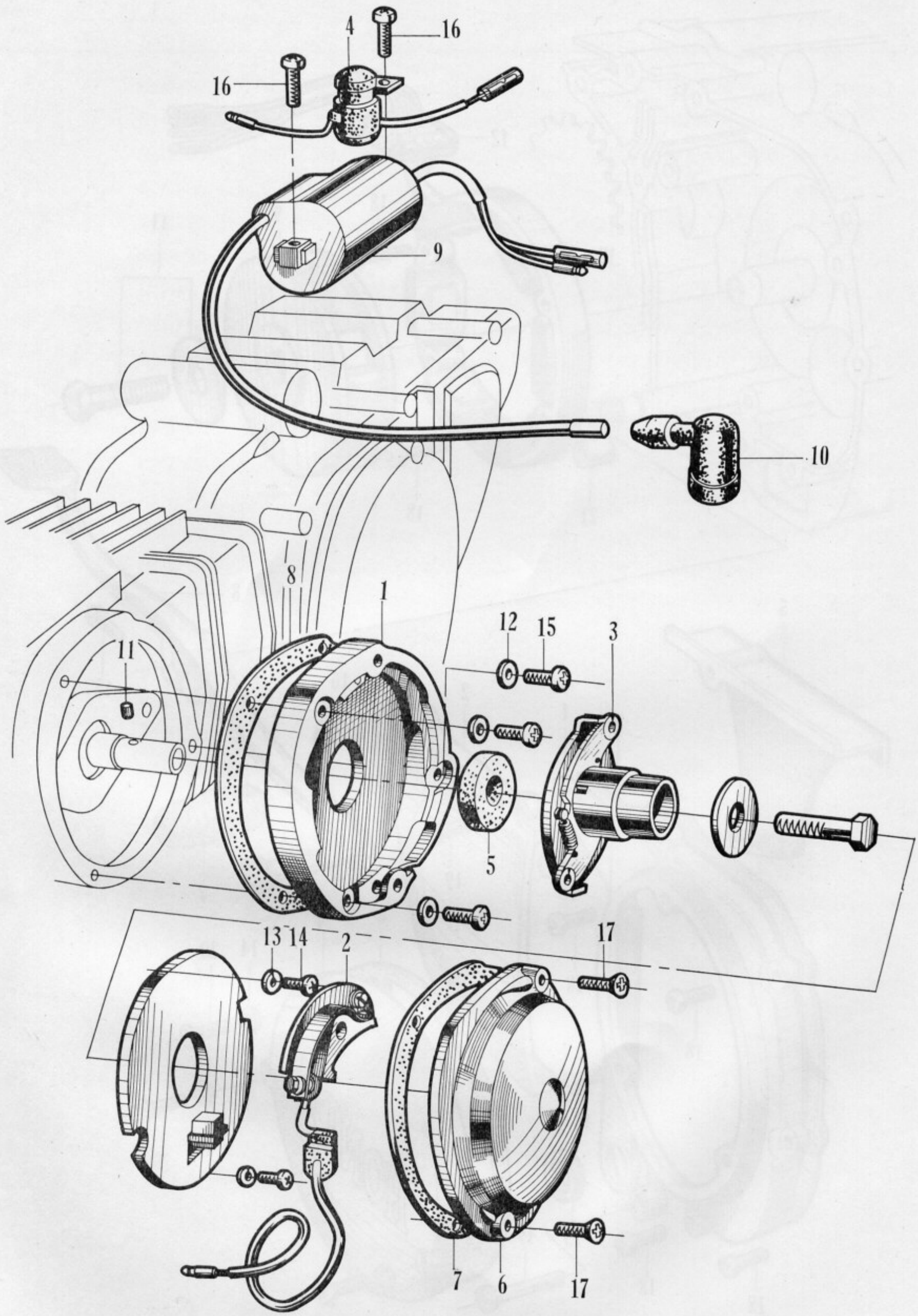
4
16
16
9
10
8
1
11
12
15
3
5
13
14
2
17
7
6
17

E-12 Contact Breaker·Advancer

Ref. No.	Part No.	Description	No. Reqd.	No. Used on From	No. Used on To	News No.
1	12332-028-010	BASE, point	1	L90-106956		
	30200-028-003	BREAKER ASSY., contact	1	L90-106956		
	30200-028-004	BREAKER ASSY., contact	1	L90-106956		
2	30202-028-003	BREAKER, contact	1	L90-106956		
	30202-216-004	BREAKER, contact	1	L90-106956		
3	30220-028-000	ADVANCER, spark	1	L90-106956		
4	30250-028-000	CONDENSER	1	L90-106956		
	30360-028-000	BASE ASSY., point	1	L90-106956		
5	30362-028-000	OIL-SEAL, 13-22-5	1	L90-106956		
6	30370-028-000	COVER, point	1	L90-106956		
7	30391-028-000	GASKET, point cover	1	L90-106956		
8	30392-028-010	GASKET, point base	1	L90-106956		
9	30400-028-013	COIL, ignition	1	L90-106956		
	30400-028-014	COIL, ignition	1	L90-106956		
10	30700-259-600	CAP, noise suppressor	1	L90-106956		
11	30905-216-000	PIN, knock, 3×5.2	1	L90-106956		
	32901-028-000	CLIP, point cord	1	L90-106956		
12	90441-028-010	WASHER, sealing, 6 mm	3	L90-106956		
13	90482-028-000	WASHER, 5 mm	2	L90-106956		
14	93500-05010	SCREW, cross., 5×10	2			
15	93500-05012	SCREW, cross., 5×12	3			
16	93500-05020	SCREW, cross., 5×20	2			
17	93700-05025	SCREW, cross., 5×25	2			

Ref. No.	Part No.	Description	No. Reqd.	No. Used on From	No. Used on To	News No.
	16100-056-010	CARBURETOR ASSY.	1	L90-106956		
1	16111-202-004	CAP	1	L90-106956		
2	16118-028-004	ADJUSTER, cable	1	L90-106956		
3	16119-028-004	TOP	1	L90-106956		
4	16122-056-004	FLOAT	1	L90-106956		
5	16125-056-004	VALVE-SET, float	1	L90-106956		
6	16126-011-004	PIN, float arm	1	L90-106956		
7	16133-202-004	JET, needle	1	L90-106956		
8	16139-056-004	HOLDER, needle jet	1	L90-106956		
9	16141-056-004	VALVE, throttle	1	L90-106956		
10	16151-056-004	NEEDLE, jet	1	L90-106956		
11	16156-202-004	PLATE, needle clip	1	L90-106956		
12	16157-259-004	CLIP, bar	1	L90-106956		
13	16162-202-004	SCREW, adjust	1	L90-106956		
14	16163-056-004	SCREW, throttle stop	1	L90-106956		
15	16164-202-004	SCREW, drain	1	L90-106956		
16	16171-202-004	WASHER, top	1	L90-106956		
17	16172-030-004	WASHER, float chamber	1	L90-106956		
18	16176-001-004	O RING, 23 ϕ	1	L90-106956		
19	16181-202-004	SPRING, adjust	1	L90-106956		
20	16182-001-004	SPRING, throttle stop	1	L90-106956		
21	16185-202-004	SPRING, throttle	1	L90-106956		
22	16187-201-004	CLIP, float chamber set	1	L90-106956		
23	16188-044-004	WASHER, fiber, 7 ϕ	1	L90-106956		
24	16189-056-004	WASHER, fiber, 6 ϕ	1	L90-106956		
25	16194-028-004	CAP, rubber	1	L90-106956		
26	99102-07504	JET, main (#75)	1			
	99102-07804	JET, main (#78)	1			
	99102-08004	JET, main (#80)	1			
	99102-08204	JET, main (#82)	1			
	99102-08504	JET, main (#85) S.T.D.	1			
	99102-08804	JET, main (#88)	1			

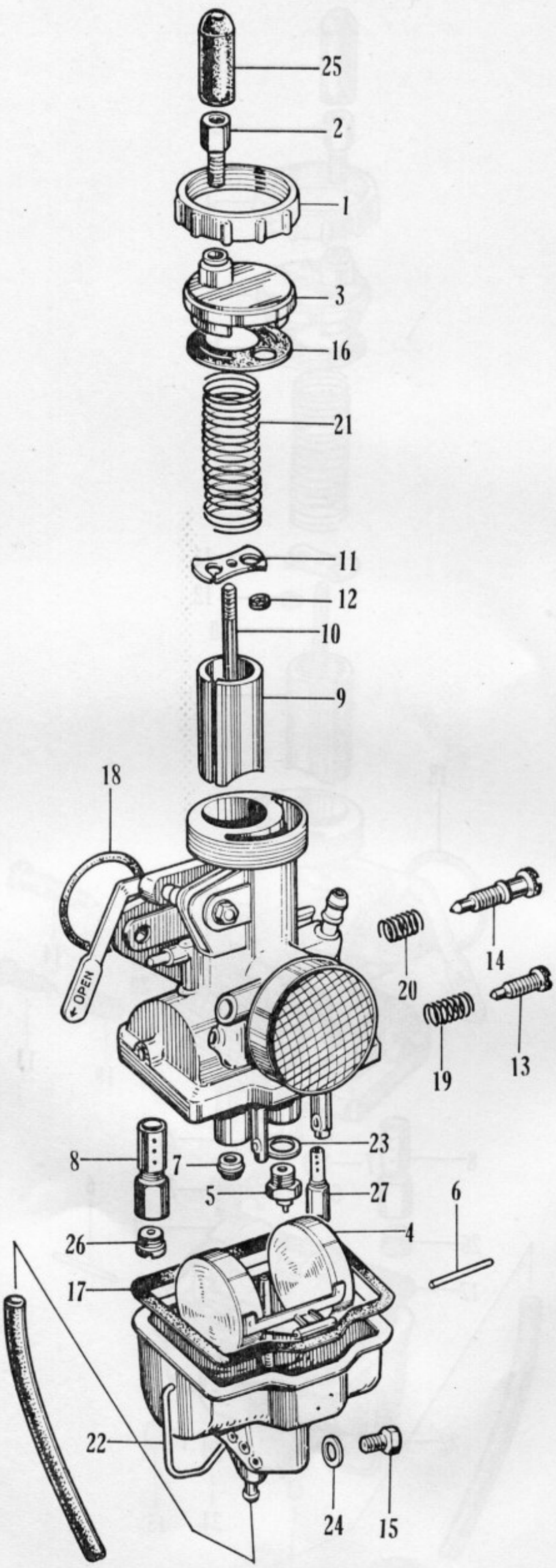
25
2
1
3
16
21
11
12
10
9
18
OPEN
14
20
13
19
23
8
7
5
27
6
4
26
17
22
24
15

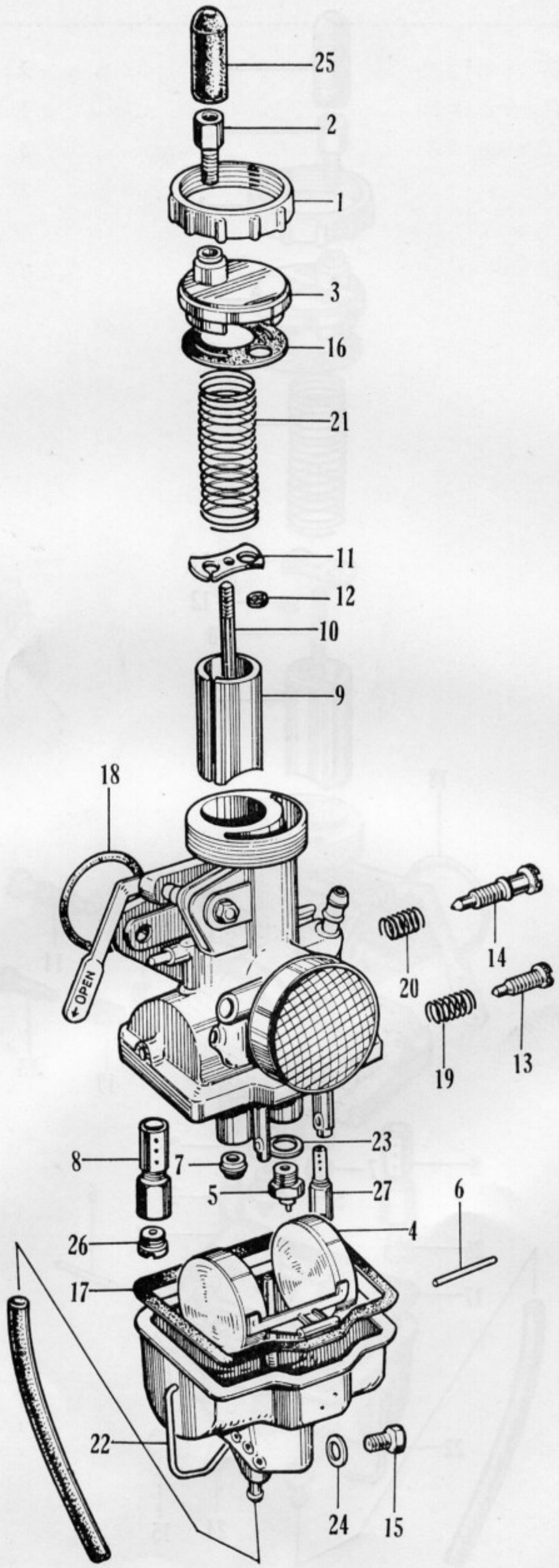
25
2
1
3
16
21
11
12
10
9
18
OPEN
14
20
19
13
23
8
7
5
27
6
4
26
17
22
24
15

E-13 Carburetor

Ref. No.	Part No.	Description	No. Reqd.	No. Used on From	No. Used on To	News No.
	99102-09004	JET, main (#90)	1			
	99102-09204	JET, main (#92)	1			
	99102-09504	JET, main (#95)	1			
27	99154-03504	JET, slow (#35) S.T.D.	1			
	99154-03804	JET, slow (#38)	1			
	99154-04004	JET, slow (#40)	1			

Ref. No.	Part No.	Description	No. Reqd.	No. Used on From	No. Used on To	News No.
1	17910-028-830	WIRE, throttle	1	L90-106956		
2	17911-023-000	GROMMET, throttle wire	1	L90-106956		
3	22870-056-000	WIRE, clutch	1	L90-106956		
4	45437-001-000	SPRING, front brake arm	1	L90-106956		
5	45450-056-000	WIRE, front brake	1	L90-106956		
6	45461-001-000	JOINT, front brake arm	1	L90-106956		
7	45462-001-000	NUT, front brake adjust	1	L90-106956		
8	45465-270-000	CLIP, front brake wire	1	L90-106956		
9	53100-056-010	PIPE, steering handle	1	L90-106956		
10	53131-011-000	HOLDER, upper, handle pipe	2	L90-106956		
11	53132-056-000	HOLDER, under, handle pipe	2	L90-106956		
12	53135-028-000	SEAT, handle cushion	2	L90-106956		
13	53141-271-000	PIPE, throttle grip	1	L90-106956		
14	53161-250-000	HINGE, throttle wire	1	L90-106956		
15	53162-056-000	HOLDER, outer, throttle wire	1	L90-106956		
16	53165-056-000	RUBBER, right, grip	1	L90-106956		
17	53166-283-000	RUBBER, left, grip	1	L90-106956		
18	53175-028-670	LEVER, right, steering handle	1	L90-106956		
19	53178-028-010	LEVER, left, steering handle	1	L90-106956		
20	53180-028-670	CAP, handle lever	2	L90-106956		
21	53192-030-000	BOLT, clutch wire adjust	2	L90-106956		
22	53231-028-010	PLATE, fork top bridge	1	L90-106956		
23	90114-028-000	SCREW, handle lever pivot	2	L90-106956		
24	90304-011-000	NUT, steering stem	1	L90-106956		
25	90321-268-000	NUT, fixing	2	L90-106956		
26	90503-011-000	WASHER, steering stem nut	1	L90-106956		
27	92000-06028	BOLT, hex., 6×28	4	L90-106956		
28	94001-10000	NUT, hex., 10 mm	2			
29	94002-06000	NUT, thin, 6 mm	2			
30	94101-06000	WASHER, flat, 6 mm	4			

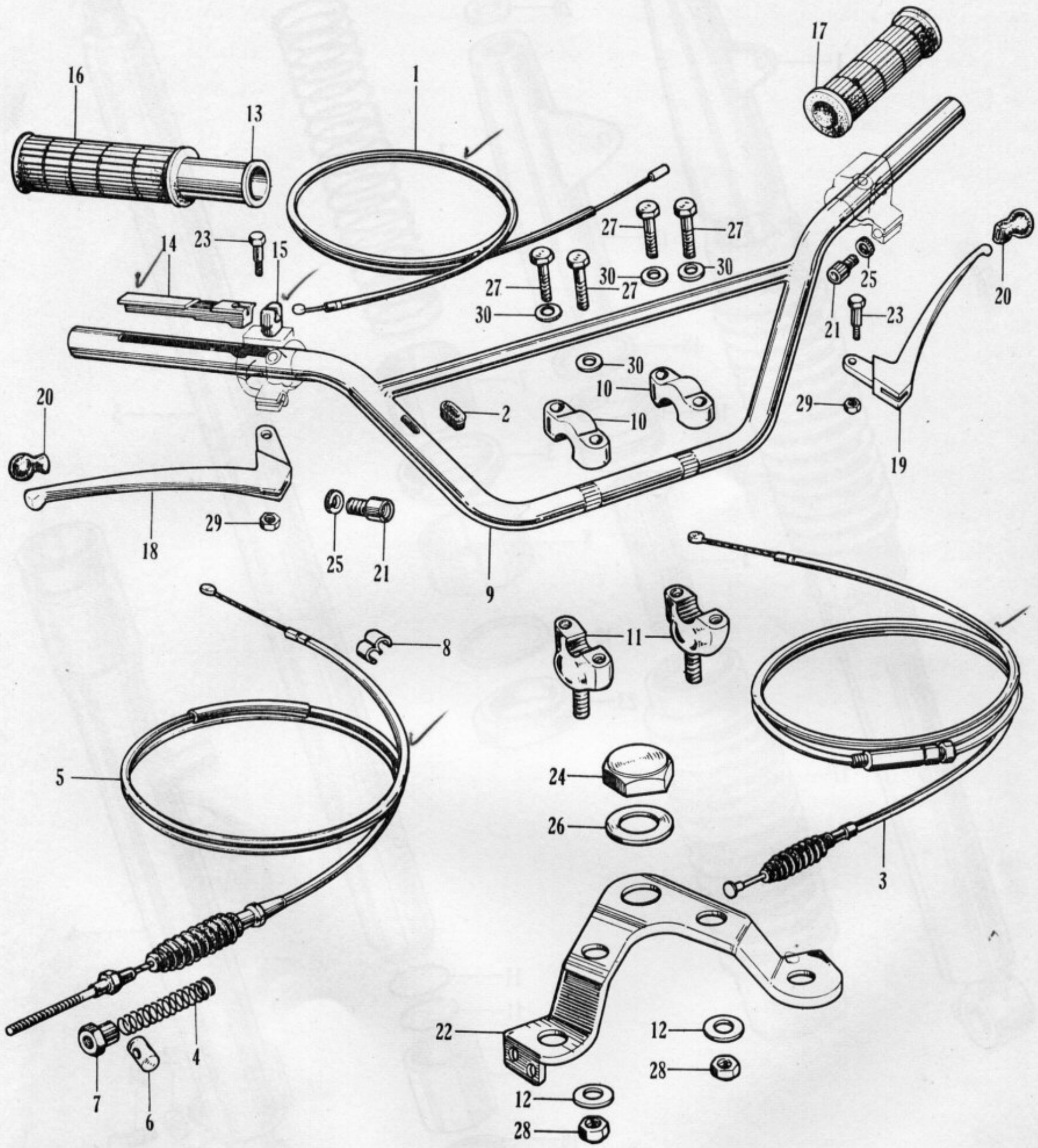
17
16
1
13
14
23
15
27
27
27
27
30
30
30
30
25
21
23
20
20
30
10
10
2
29
19
29
18
25
21
9
8
11
5
24
26
3
22
12
28
12
28
4
7
6

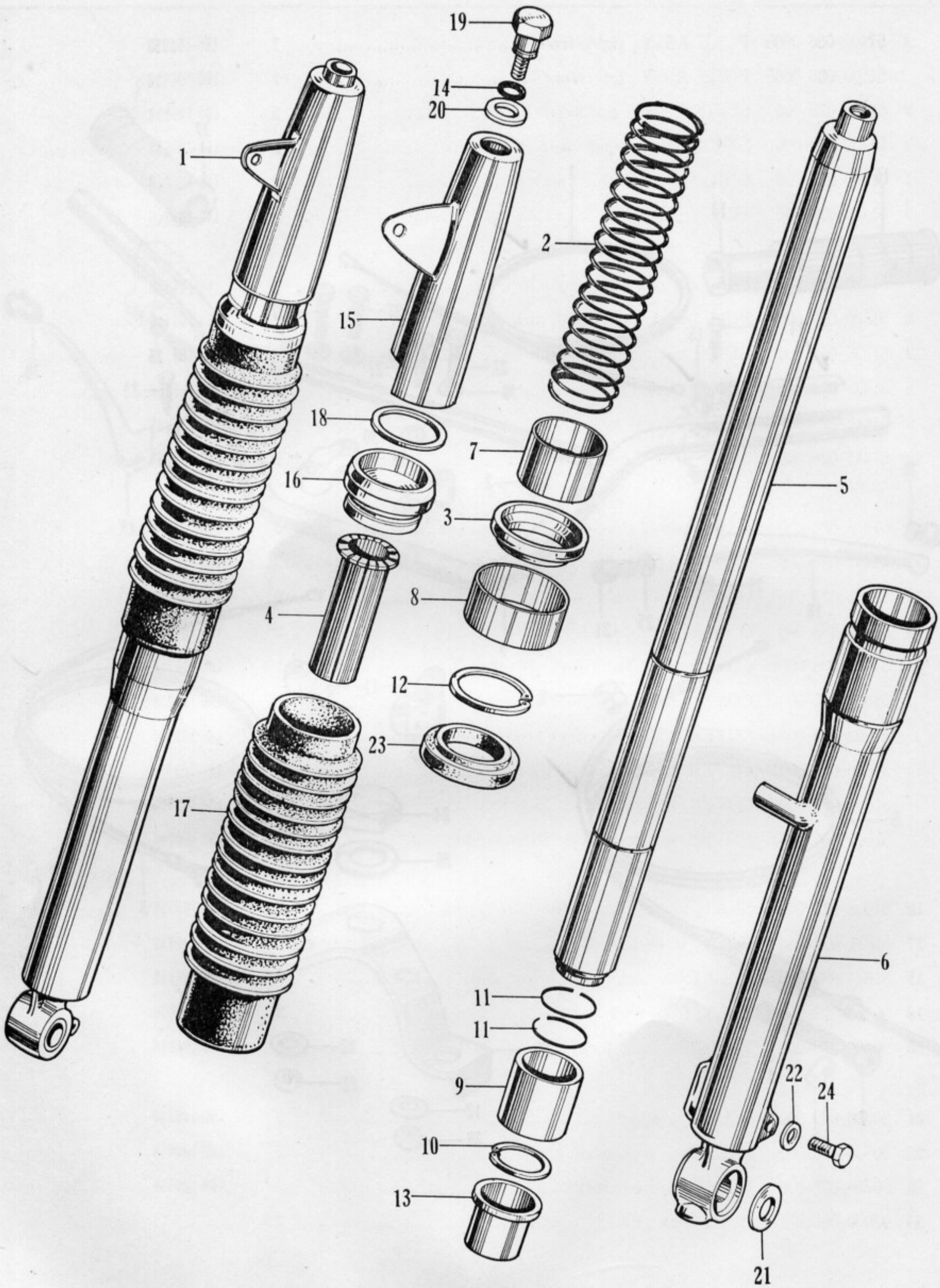
19
14
20
1
2
15
18
7
16
5
3
8
4
12
23
17
6
11
11
22
24
9
10
13
21

F-2 Front Fork

Ref. No.	Part No.	Description	No.Reqd.	No. Used on From	No. Used on To	News No.
1	51400-056-000S	FORK ASSY., right, front	1	L90-106956		
	51500-056-000S	FORK ASSY., left, front	1	L90-106956		
2	51401-028-000	SPRING, front cushion	2	L90-106956		
3	51407-229-000	SEAT, under, front cushion spring	2	L90-106956		
4	51409-028-000	GUIDE, front cushion spring	2	L90-106956		
5	51410-056-000	PIPE, front fork	2	L90-106956		
	51420-056-000S	PIPE, bottom, right front fork	1	L90-106956		
6	51520-056-000S	PIPE, bottom, left front fork	1	L90-106956		
7	51430-056-000	GUIDE, under, front cushion	2	L90-106956		
8	51438-028-000	RING, bottom case	2	L90-106956		
9	51442-229-000	PISTON, front fork	2	L90-106956		
10	51445-028-000	SNAP-RING, fork piston	2	L90-106956		
11	51446-028-000	RING, piston stopper	4	L90-106956		
12	51447-028-000	CIR-CLIP, internal, 37mm	2	L90-106956		
13	51451-028-010	GUIDE, front fork pipe	2	L90-106956		
14	51493-273-000	O RING, 8.4×2.4	2	L90-106956		
	51602-056-000B	COVER, right front fork (Black)	1	L90-106956		
	51602-056-000C	COVER, right front fork (Scarlet)	1	L90-106956		
	51602-056-000Z	COVER, right front fork (Non sanding)	1	L90-106956		
15	51606-056-000B	COVER, left front fork (Black)	1	L90-106956		
	51606-056-000C	COVER, left front fork (Scarlet)	1	L90-106956		
	51606-056-000Z	COVER, left front fork (Non sanding)	1	L90-106956		
16	51608-028-000	SEAT, lower, fork cover	2	L90-106956		
17	51611-056-000	BOOT, front fork	2	L90-106956		
18	51624-028-000	PACKING, fork cover lower seat	2	L90-106956		
19	90123-273-000	BOLT, front fork	2	L90-106956		
20	90506-273-000	WASHER, front fork	2	L90-106956		
21	90528-229-000	WASHER, 12.5 ϕ	2	L90-106956		
22	90543-273-000	PACKING, fork drain cock	2	L90-106956		
23	90756-028-000	OIL-SEAL, front fork	2	L90-106956		
24	92000-06012	BOLT, hex., 6×12	2			

Ref. No.	Part No.	Description	No. Reqd.	No. Used on From	No. Used on To	News No.
1	38100-056-000	HORN	1	L90-106956		
2	45465-028-000	CLIP, wire	1	L90-106956		
3	45470-056-000	GUIDE, speedometer cable	1	L90-106956		
4	53200-028-000B	STEM, steering (Black)	1	L90-106956		
	53200-028-000C	STEM, steering (Scarlet)	1	L90-106956		
	53200-028-000Z	STEM, steering (Non sanding)	1	L90-106956		
5	53211-028-305	RACE, steering top cone	1	L90-106956		
6	53212-030-305	RACE, steering bottom cone	1	L90-106956		
7	53214-001-010	DUST-SEAL, steering head	1	L90-106956		
8	53215-001-000	WASHER, steering head dust-seal	1	L90-106956		
9	53220-028-000	THREAD, top, steering head	1	L90-106956		
10	53600-001-020	LOCK, steering handle	1	L90-106956		
11	61100-056-680S	FENDER, front	1	L90-106956		
12	90164-028-000	SCREW, U lock, 6×12	2	L90-106956		
13	92000-06012	BOLT, hex., 6×12	5			
14	92000-06016	BOLT, hex., 6×16	1			
15	92000-08032	BOLT, hex., 8×32	2			
16	94101-06000	WASHER, flat, 6 mm	6			

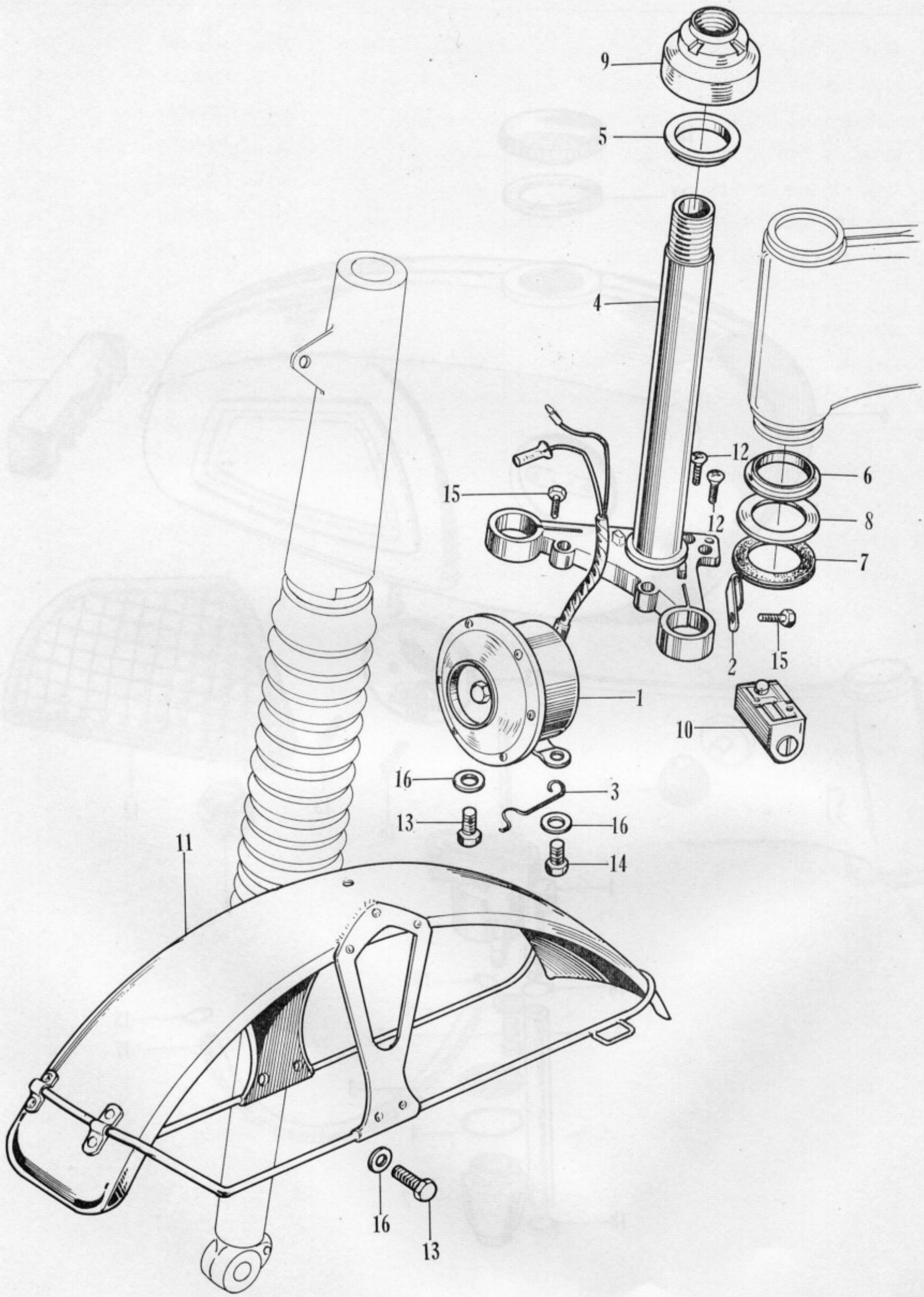
9
5
4
12
6
15
12
8
7
2
15
1
10
16
3
13
16
14
11
16
13

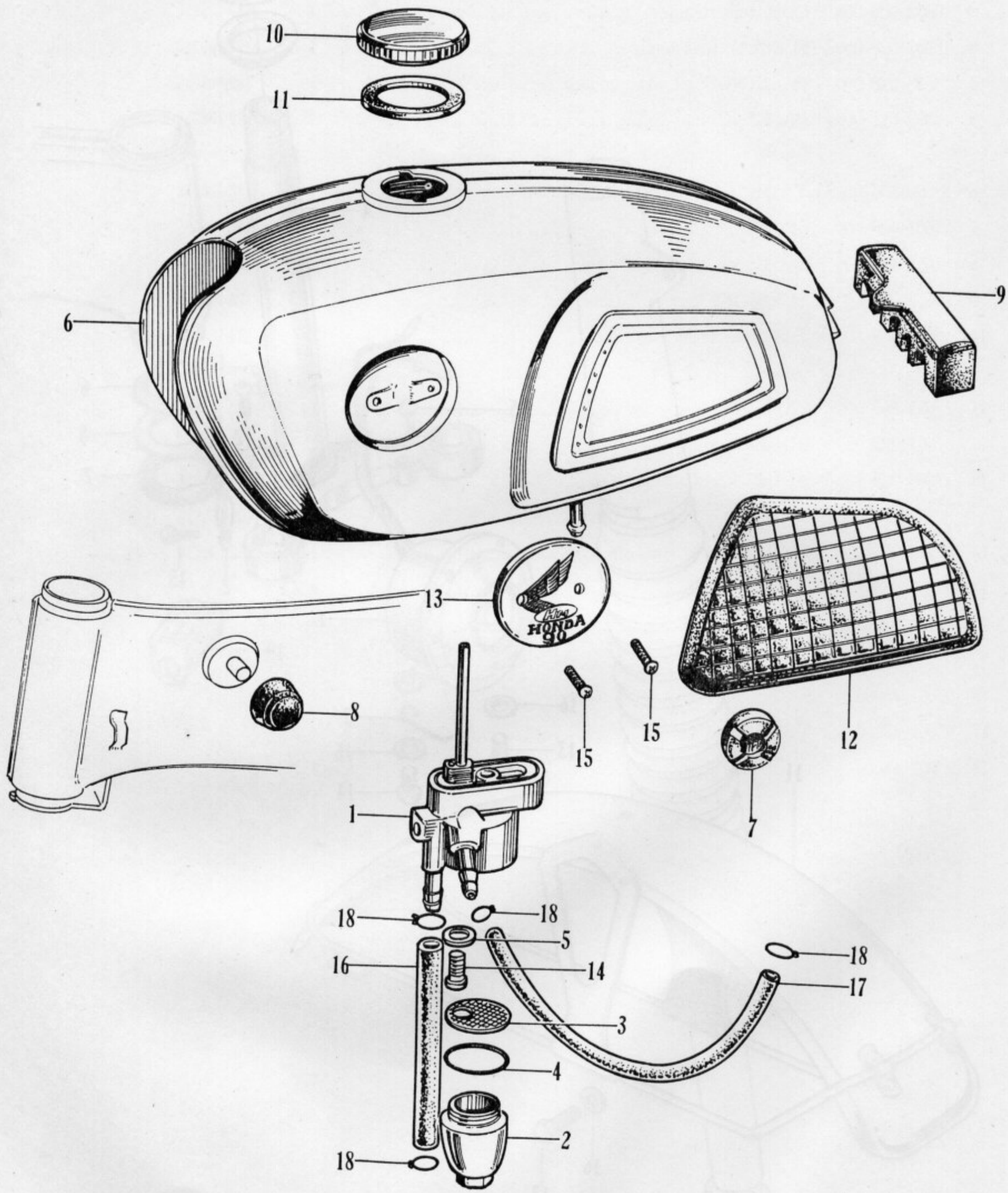
10
11
6
9
13
HONDA
90
8
15
15
12
7
1
18
18
5
16
14
18
17
3
4
2
18

F-4 Fuel Tank

Ref. No.	Part No.	Description	No. Reqd.	No. Used on From	No. Used on To	News No.
	16950-028-000	COCK ASSY., fuel	1	L90-106956		
1	16951-028-000	BODY, fuel cock	1	L90-106956		
2	16952-028-000	CUP, fuel strainer	1	L90-106956		
3	16957-028-000	SCREEN, fuel strainer	1	L90-106956		
4	16958-028-000	PACKING, fuel strainer cup	1	L90-106956		
5	16993-011-000	PACKING, fuel fixing	1	L90-106956		
6	17500-056-020S	TANK, fuel	1	L90-106956		
7	17602-028-000	SPACER, fuel tank	2	L90-106956		
8	17611-028-000	CUSHION, front, fuel tank	2	L90-106956		
9	17613-056-000	CUSHION, rear, fuel tank	1	L90-106956		
10	17620-259-000	CAP, fuel filler	1	L90-106956		
11	17631-259-000	PACKING, fuel filler cap	1	L90-106956		
	17661-223-000	RUBBER, right, knee grip	1	L90-106956		
12	17662-223-000	RUBBER, left, knee grip	1	L90-106956		
	87121-056-000	EMBLEM, right, fuel tank	1	L90-106956		
13	87122-056-000	EMBLEM, left, fuel tank	1	L90-106956		
14	93500-06018	SCREW, cross., 6×18	1			
15	93700-0300802	SCREW, cross., 3×8	4			
16	95001-45095	TUBE, fuel, 4.5×95	1			
17	95001-45140	TUBE, fuel, 4,5×140	1			
18	95002-45000	CLIP, fuel tube	4			

Ref. No.	Part No.	Description	No. Reqd.	No. Used on From	No. Used on To	News No.
1	11911-056-810	GUARD, dust	1	L90-106956		
2	50100-056-010B	BODY, frame (Black)	1	L90-106956		
	50100-056-010C	BODY, frame (Scarlet)	1	L90-106956		
	50100-056-010Z	BODY, frame (下塗り)	1	L90-106956		
3	50301-030-305	RACE, steering top ball	1	L90-106956		
4	50302-001-305	RACE, steering bottom ball	1	L90-106956		
5	83600-028-020B	COVER, battery (Black)	1	L90-106956		
	83600-028-020C	COVER, battery (Scarlet)	1	L90-106956		
	83600-028-020Z	COVER, battery (Non sanding)	1	L90-106956		
6	87125-253-680	PLATE, name	1	L90-106956		
7	90112-028-000	BOLT, engine support	1	L90-106956		
8	92000-06038	BOLT, hex., 6×38	2			
9	92000-08122	BOLT, hex., 8×122	1			
10	92030-08125	BOLT, hex., 8×125	1			
11	92300-06010	BOLT, hex., 6×10	1			
12	94001-08000	NUT, hex., 8 mm	4			
13	94101-06000	WASHER, flat, 6 mm	3			
14	94101-08000	WASHER, flat, 8 mm	2			
15	94111-08000	WASHER, spring, 8 mm	2			
16	96211-06000	BALL, steel, #6	42			

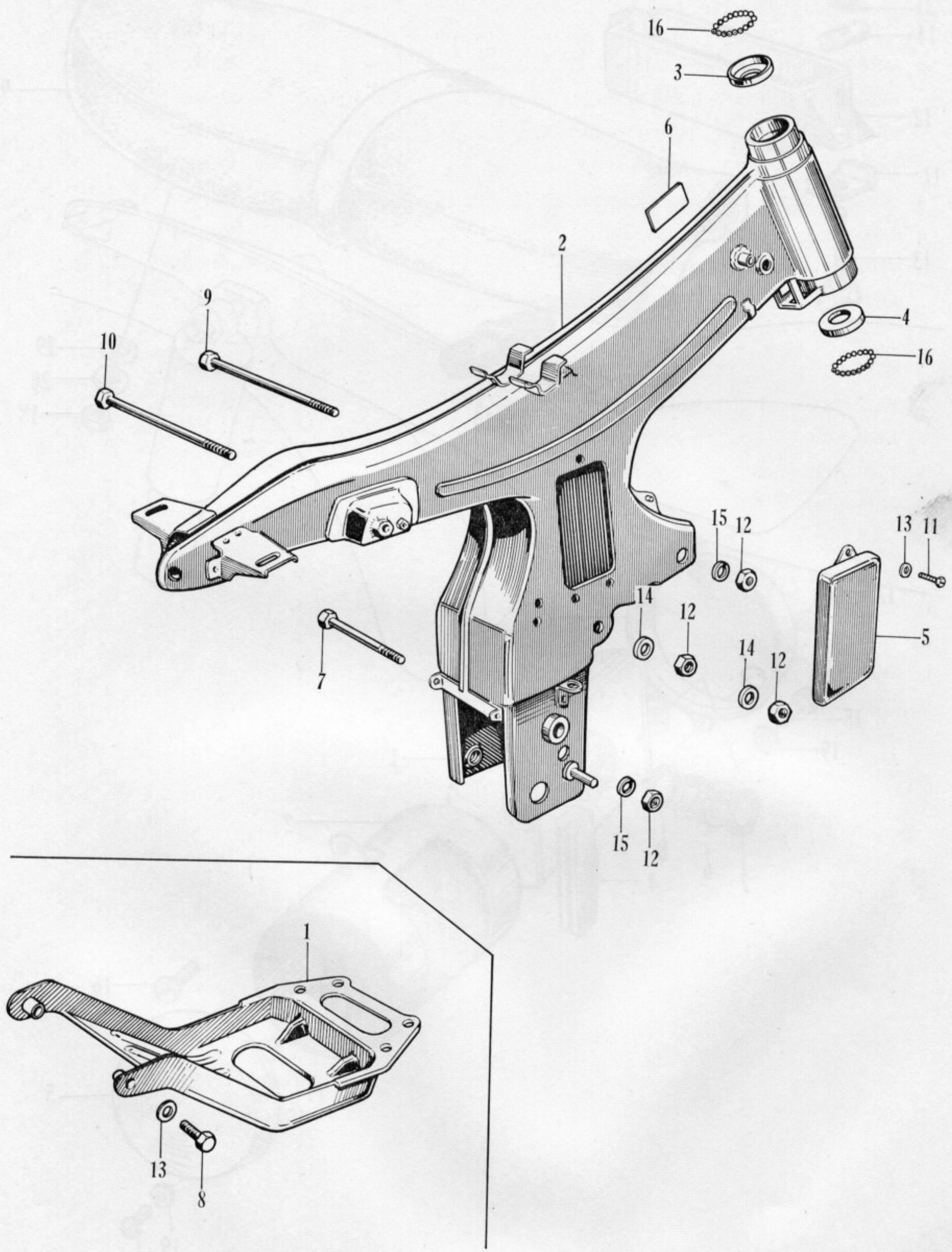
16
3
6
2
9
10
4
16
15
12
13
11
14
12
5
14
12
7
15
12
1
13
8

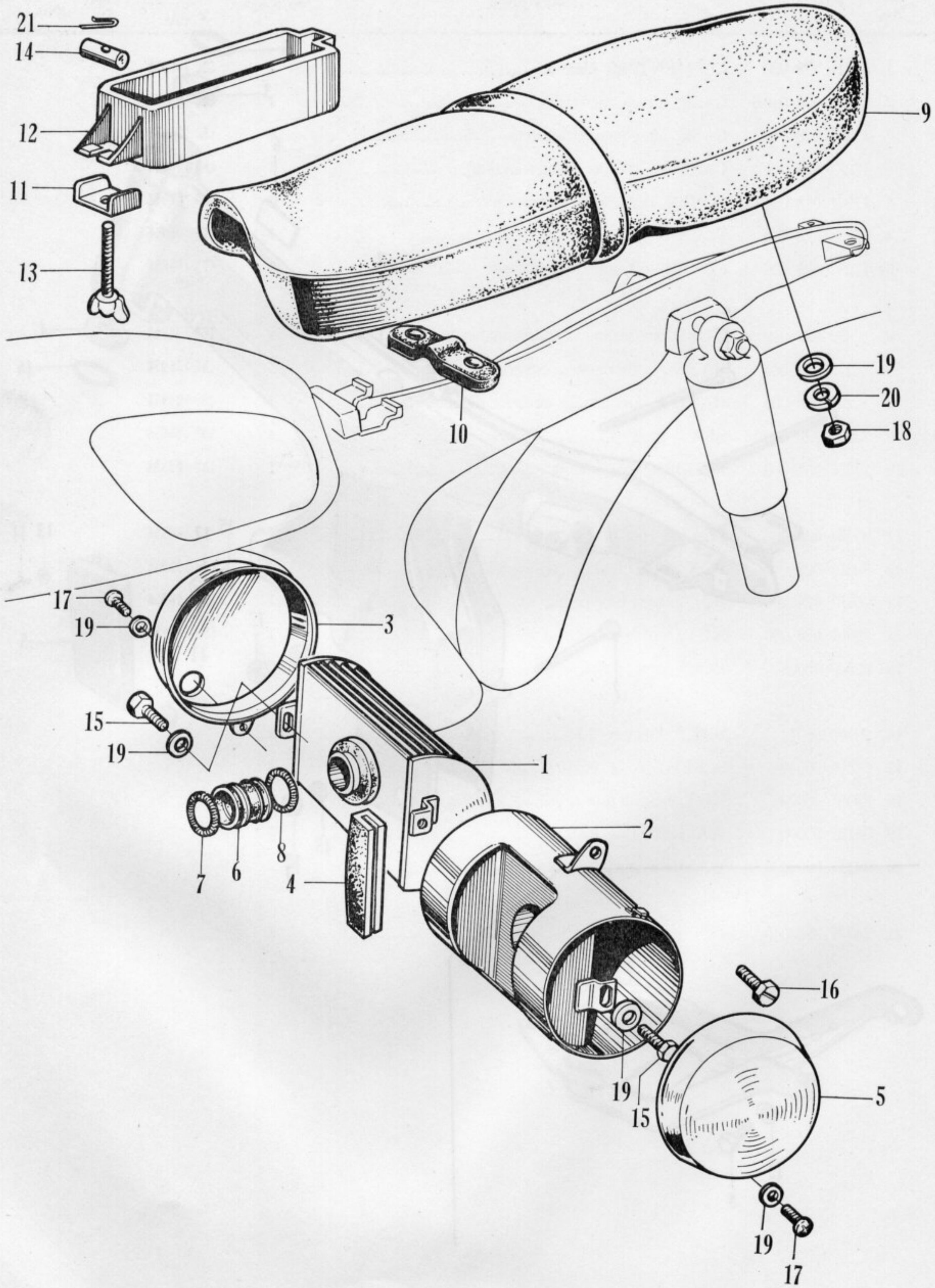
21
14
12
11
13
9
19
20
18
10
17
19
3
15
19
1
2
7
6
8
4
16
19
15
5
19
17

F-6 Air Cleaner·Seat

Ref. No.	Part No.	Description	No. Reqd.	No. Used on From	No. Used on To	News No.
1	17211-028-030	ELEMENT, air cleaner	1	L90-106956		
2	17221-028-040B	CASE, air cleaner (Black)	1	L90-106956		
	17221-028-040C	CASE, air cleaner (Scarlet)	1	L90-106956		
	17221-028-040Z	CASE, air cleaner (Non sanding)	1	L90-106956		
3	17231-028-050XL	COVER, right, air cleaner case	1	L90-106956		
4	17235-028-000	PACKING, cleaner cover	1	L90-106956		
5	17251-028-020XL	COVER, left, air cleaner case	1	L90-106956		
6	17253-028-010	TUBE, air cleaner connecting	1	L90-106956		
7	17255-028-000	BAND A, air cleaner connecting tube	1	L90-106956		
8	17256-028-000	BAND B, air cleaner connecting tube	1	L90-106956		
9	77200-229-000A	SEAT, dual	1	L90-106956		
10	77201-051-000	RUBBER, seat setting	1	L90-108299		
11	89204-028-000	PLATE, tool box setting	1	L90-106956		
12	89211-028-000	BOX, tool	1	L90-106956		
13	90161-028-000	BOLT, tool box fixing	1	L90-106956		
14	90301-028-000	NUT, tool box setting	1	L90-106956		
15	92000-06008	BOLT, hex., 6×8	2			
16	92300-06014	BOLT, hex., 6×14	2			
17	93500-06010	SCREW, cross., 6×10	2			
18	94001-06000	NUT, hex., 6 mm	2			
19	94101-06000	WASHER, flat, 6 mm	6			
20	94111-06000	WASHER, spring, 6 mm	2			
21	94201-20120	PIN, cotter, 2.0 mm	1			

Ref. No.	Part No.	Description	No. Reqd.	No. Used on From	No. Used on To	News No.
1	35350-028-000	SWITCH ASSY., stop	1	L90-106956		
2	35357-028-010	SPRING, stop switch	1	L90-106956		
3	43451-028-000	ROD, brake	1	L90-106956		
4	43472-001-000	SPRING, rear brake rod	1	L90-106956		
5	45461-001-000	JOINT, front brake arm	1	L90-106956		
6	45462-001-000	NUT, front brake adjust	1	L90-106956		
7	46500-056-000	PEDAL, brake	1	L90-106956		
8	46514-028-000	SPRING, brake pedal	1	L90-106956		
9	50500-056-000B	STAND, main	1	L90-106956		
10	50522-028-010	SPRING, main stand	1	L90-106956		
11	50523-028-000	HOOK, main stand spring	1	L90-106956		
12	50524-011-000	RUBBER, main stand stopper	1	L90-106956		
13	50526-028-010	PIPE, main stand pivot	1	L90-106956		
14	50528-028-000	PLUG, pivot pipe oil	1	L90-106956		
15	50600-056-010B	BAR, step	1	L90-106956		
16	50661-283-010	RUBBER, step	2	L90-106956		
17	90521-028-000	WASHER, 17×22	1	L90-106956		
18	92000-08022	BOLT, hex., 8×22	4			
19	94101-06000	WASHER, flat, 6 mm	1			
20	94111-08000	WASHER, spring, 8 mm	4			
21	94201-20150	PIN, cotter, 2.0 mm	1			

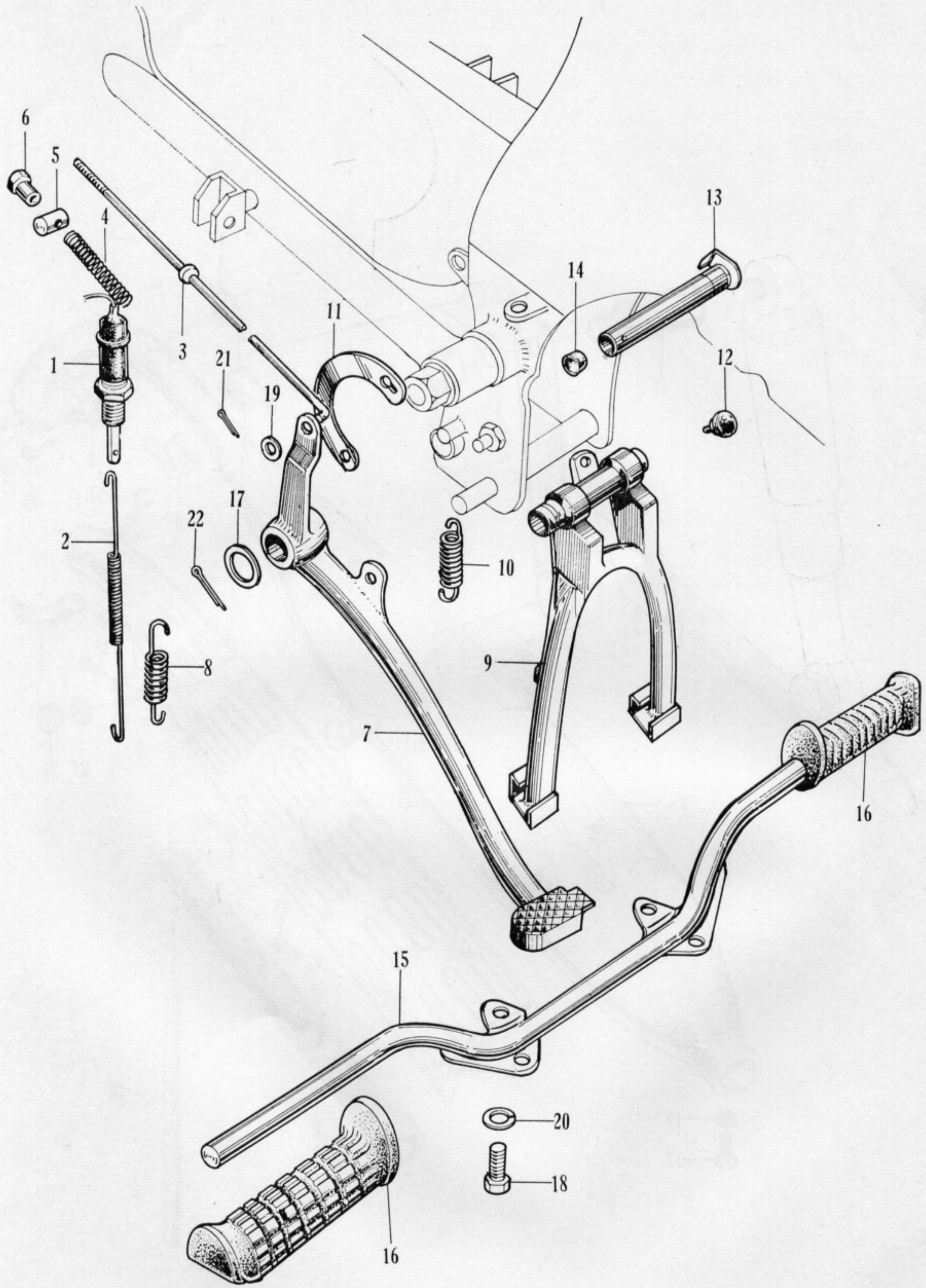
6
5
4
3
1
21
19
11
13
14
12
2
22
17
10
8
9
7
16
15
20
18
16

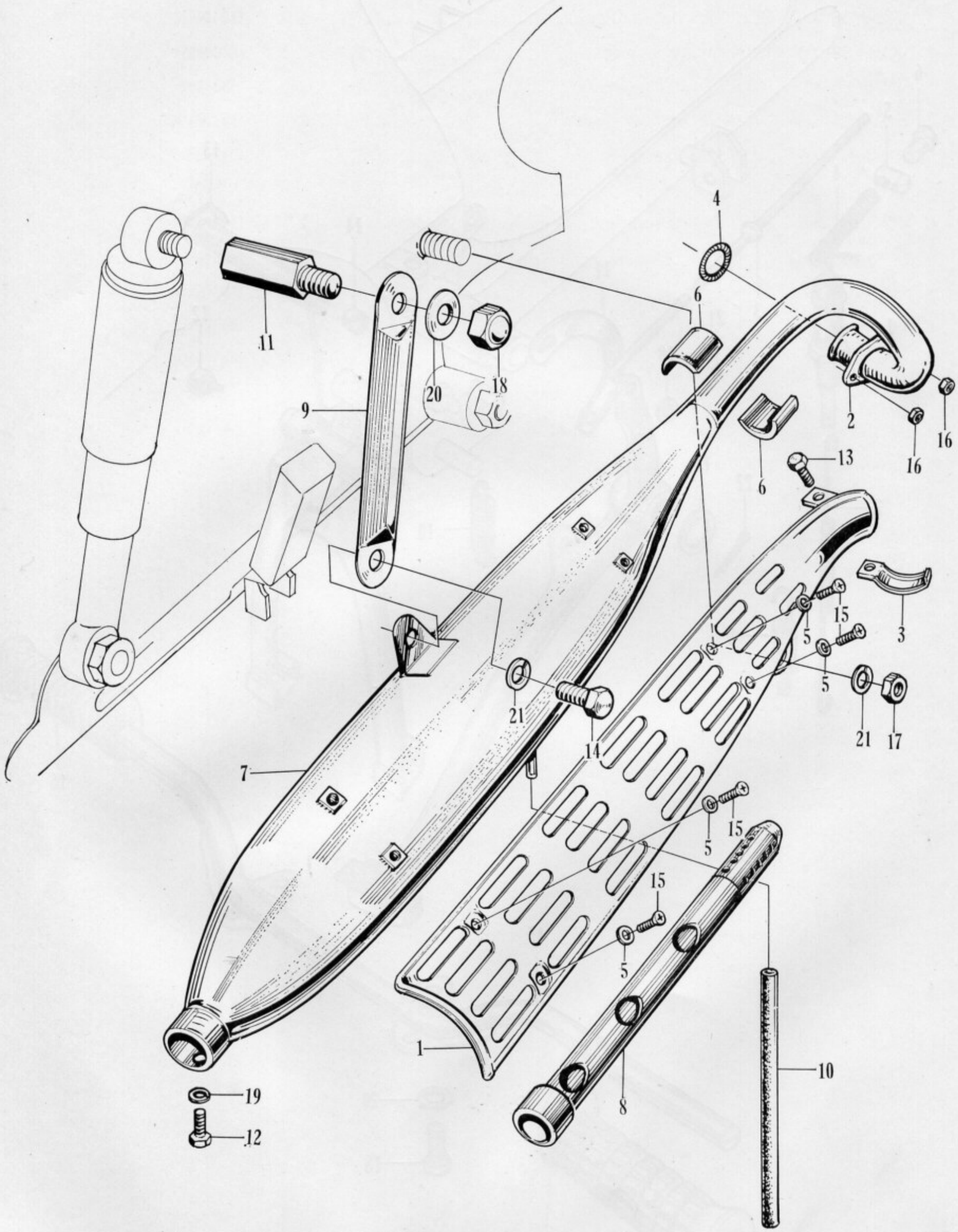
4
6
11
20
18
9
2
16
16
13
6
3
15
5
5
21
14
21
17
7
15
5
15
5
1
10
8
19
12

F-8 Exhaust Muffler

Ref. No.	Part No.	Description	No. Reqd.	No. Used on From	No. Used on To	News No.
1	18230-056-000	PROTECTOR, muffler	1	L90-106956		
2	18231-028-000	JOINT, exhaust pipe	1	L90-106956		
3	18271-056-000	BAND, protector setting	1	L90-106956		
4	18291-028-000	GASKET, exhaust pipe	1	L90-106956		
5	18292-254-000	PACKING, protector	4	L90-106956		
6	18293-035-000	PACKING, protector band	2	L90-106956		
7	18300-056-040	MUFFLER, exhaust	1	L90-106956		
8	18301-028-000	PIPE, exhaust diffuser	1	L90-106956		
9	18353-056-010	STAY, rear, muffler	1	L90-106956		
10	18381-056-000	PIPE, muffler drain	1	L90-106956		
11	90120-056-010	BOLT, rear, muffler setting	1	L90-106956		
12	92000-06008	BOLT, hex., 6×8	1			
13	92000-06016	BOLT, hex., 6×16	1			
14	92000-08014	BOLT, hex., 8×14	1			
15	93700-0600849	SCREW, cross., 6×8	4			
16	94001-06000	NUT, hex., 6 mm	2			
17	94001-08000	NUT, hex., 8 mm	2			
18	94021-08000	NUT, blind 8 mm	1			
19	94101-06000	WASHER, flat, 6 mm	1			
20	94101-08000	WASHER, flat, 8 mm	1			
21	94111-08000	WASHER, spring, 8 mm	2			

Ref. No.	Part No.	Description	No.Reqd.	No. Used on From	No. Used on To	News No.
	89010-028-000	TOOL-SET	1	L90-106956		
1	89101-028-010	BAG, tool	1	L90-106956		
2	89211-001-000	WRENCH, box, 9 mm	1	L90-106956		
3	89212-001-000	WRENCH, box, 17 mm	1	L90-106956		
4	89214-001-000	WRENCH, box, 23 mm	1	L90-106956		
5	89216-264-000	WRENCH, sparking plug	1	L90-106956		
6	99003-10000	DRIVER, plus, No. 2	1			
7	99003-20000	DRIVER, plus, No. 3	1			
8	99003-30000	DRIVER, minus, No.2	1			
9	99003-50000	GRIP	1			
10	99001-10140	SPANNER, double head, 10×14	1			
11	99002-13500	PLIERS, 134	1			

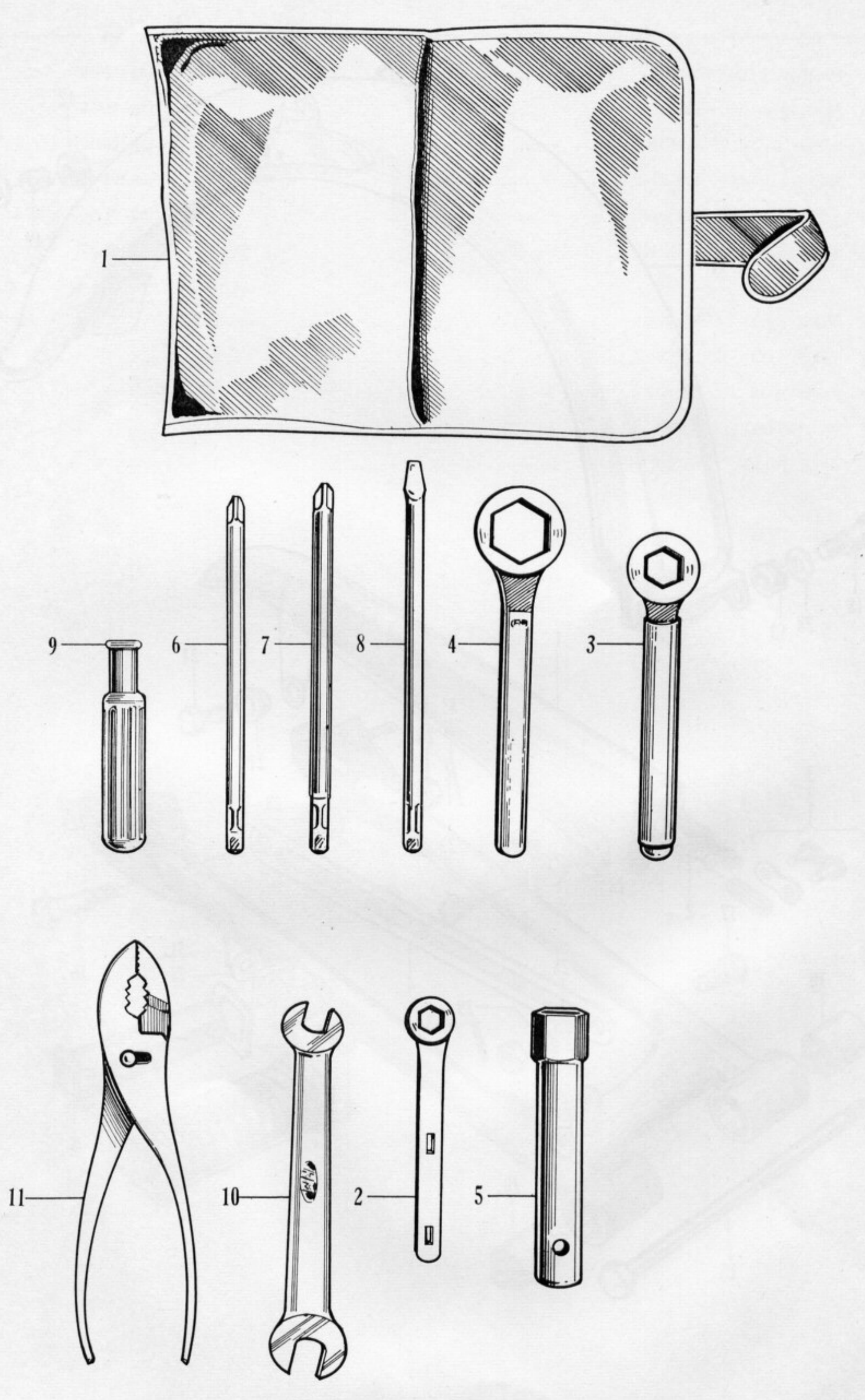
1
9
6
7
8
4
3
11
10
2
5

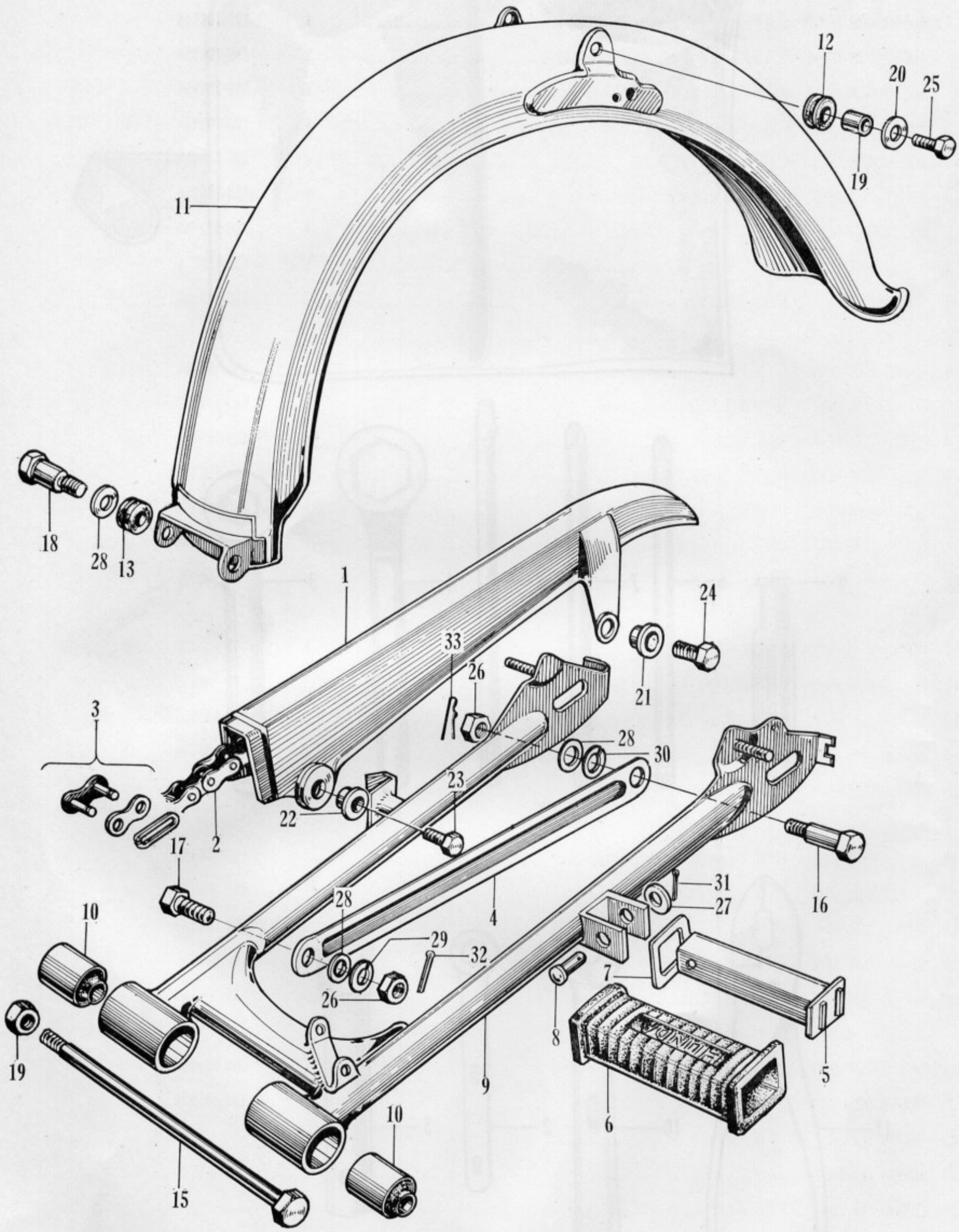
12
20
25
19
11
18
28
13
1
24
33
26
21
3
28
30
23
22
17
2
31
27
16
28
4
10
29
32
7
26
8
19
9
5
10
6
15

F-10 Rear Fork·Rear Fender

Ref. No.	Part No.	Description	No. Reqd.	No. Used on From	No. Used on To	News No.
1	40510-028-010B	CASE, drive chain (Black)	1	L90-106956		
	40510-028-010C	CASE, drive chain (Scarlet)	1	L90-106956		
	40510-028-010Z	CASE, drive chain (Non sanding)	1	L90-106956		
2	40530-028-005	CHAIN, drive	1	L90-106956		
	40530-028-003	CHAIN, drive	1	L90-106956		
3	40531-205-003	JOINT, drive chain	1	L90-106956		
	40531-028-005	JOINT, drive chain	1	L90-106956		
4	43432-028-010	ARM, rear brake stopper	1	L90-106956		
5	50701-024-010	BAR, pillion step	2	L90-106956		
6	50705-024-000	RUBBER, pillion step	2	L90-106956		
7	50712-024-000	WASHER, pillion step	2	L90-106956		
8	50715-024-000	PIN, pillion step	2	L90-106956		
9	52100-056-000B	FORK, rear (Black)	1	L90-106956		
	52100-056-000C	FORK, rear (Scarlet)	1	L90-106956		
	52100-056-000Z	FORK, rear (Non sanding)	1	L90-106956		
10	52108-028-000	BUSH, rubber, rear fork pivot	2	L90-106956		
11	80100-056-020S	FENDER, rear	1	L90-106956		
12	80105-028-000	CUSHION A, rear fender	2	L90-106956		
13	80106-229-010	CUSHION B, rear fender	2	L90-106956		
14	80108-028-000	COLLAR A, rear fender	2	L90-106956		
15	90121-028-020	BOLT, rear fork pivot	2	L90-106956		
16	90127-001-010	BOLT, rear brake torque	1	L90-106956		
17	90133-028-010	BOLT, rear brake stopper arm	1	L90-106956		
18	90162-229-000	BOLT, rear fender setting	2	L90-106956		
19	90308-028-000	NUT, rear fork pivot	1	L90-106956		
20	90504-700-000	WASHER, tank collar lock	2	L90-106956		
21	90522-034-000	WASHER, light case setting	1	L90-106956		
22	90554-028-000	WASHER, distance, 7×10	2	L90-106956		
23	92000-06008	BOLT, hex., 6×8	2			
24	92000-06014	BOLT, hex., 6×14	1			
25	92000-06022	BOLT, hex., 6×22	2			
26	94001-08000	NUT, hex., 8 mm	2			

Ref. No.	Part No.	Description	No. Reqd.	No. Used on From	No. Used on To	News No.
27	94101-06000	WASHER, flat, 6 mm	2			
28	94101-08000	WASHER, flat, 8 mm	4			
29	94111-08000	WASHER, spring, 8 mm	1			
30	94111-10000	WASHER, spring, 10 mm	1			
31	94201-16150	PIN, cotter, 1.6 mm	2			
32	94201-20120	PIN, cotter, 2.0 mm	1			
33	94251-08000	PIN, lock, 8 mm	1			

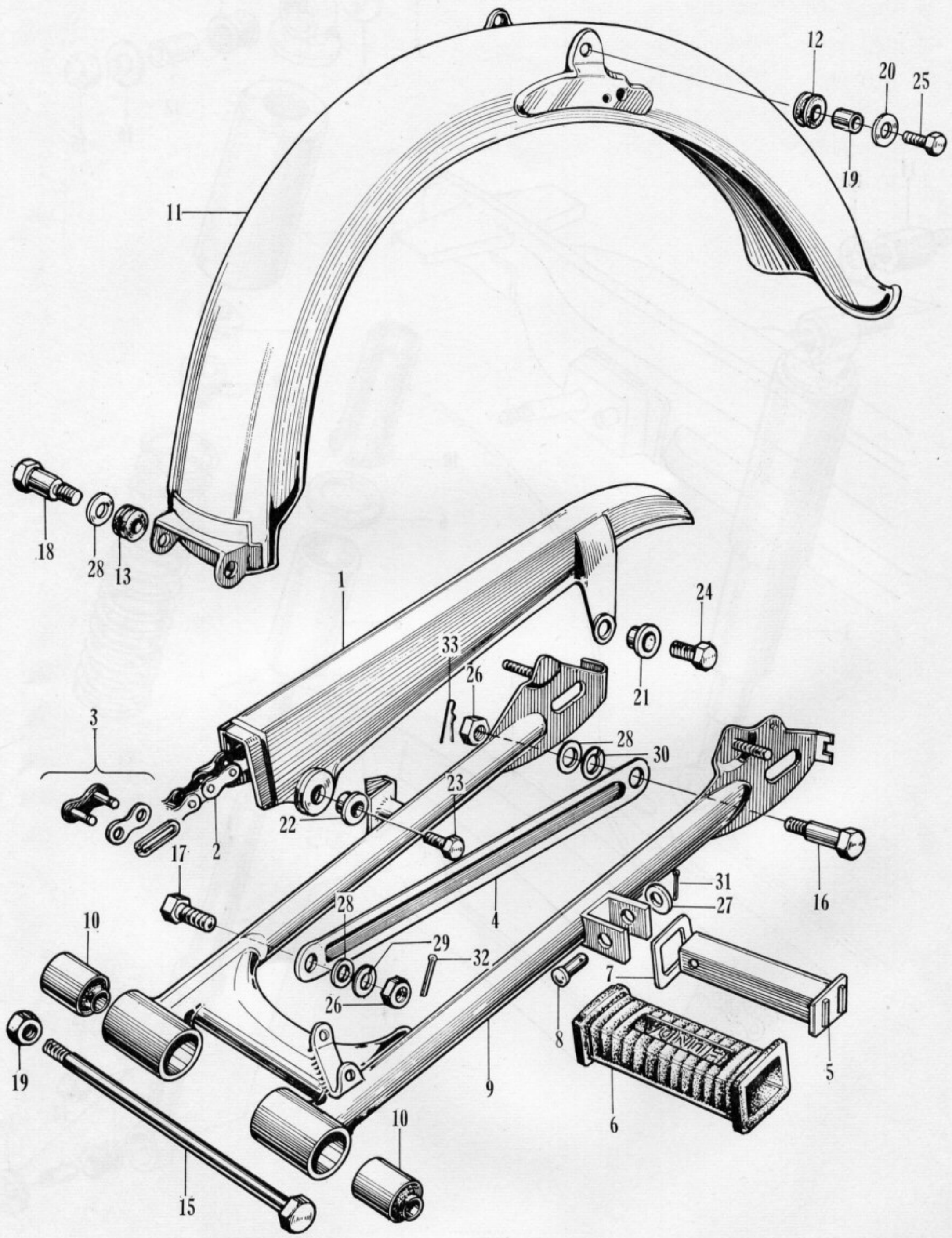
12
20
25
19
11
18
28
13
1
24
33
26
21
3
28
30
23
22
2
17
31
27
16
28
4
10
29
32
7
26
8
19
9
5
6
10
15

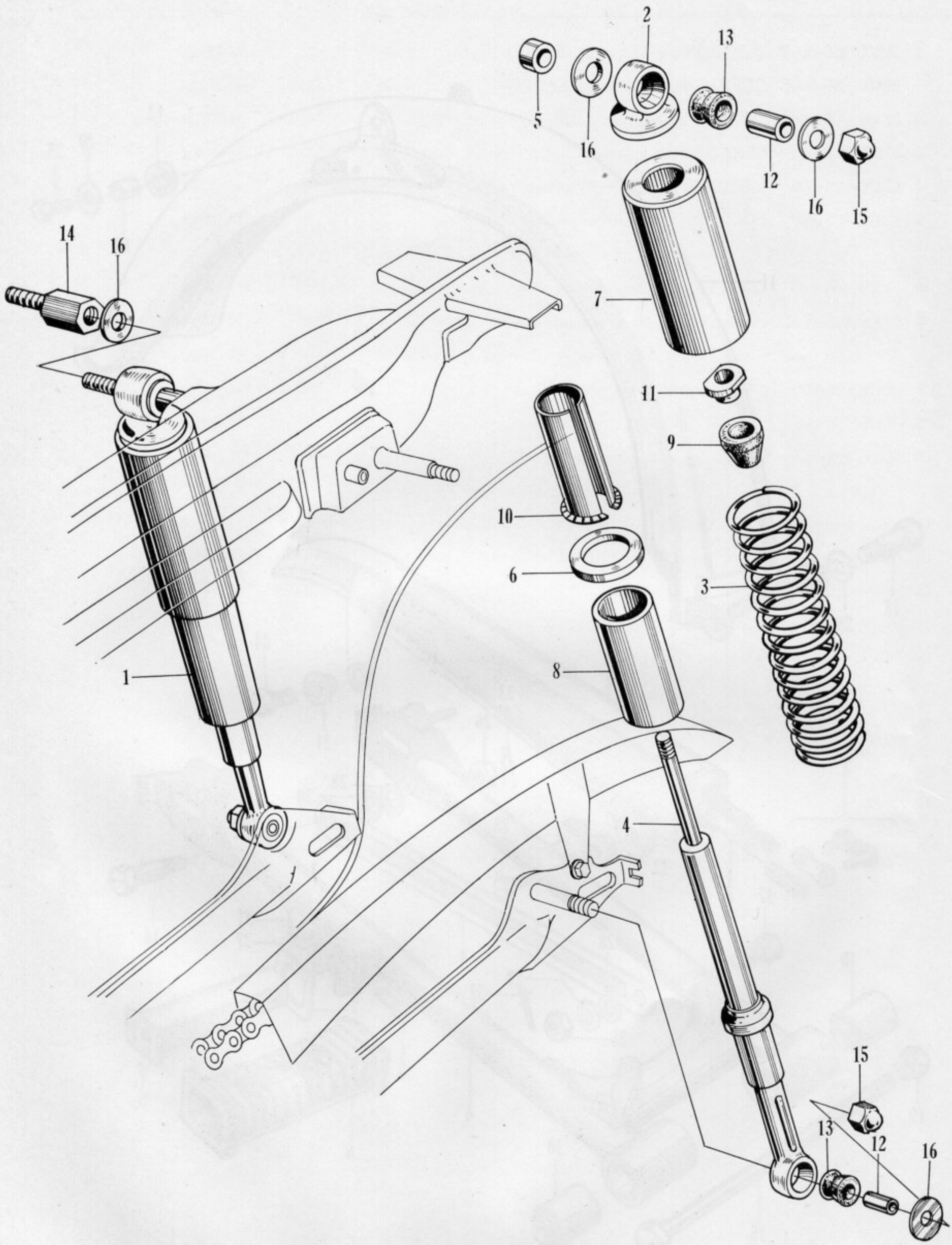
2
13
5
16
12
16
15
14
16
7
11
9
10
6
3
8
1
4
15
13
12
16

F-11 Rear Cushion

Ref. No.	Part No.	Description	No. Reqd.	No. Used on From	No. Used on To	News No.
1	52400-056-000B	CUSHION ASSY., rear (Black)	2	L90-106956		
	52400-056-000C	CUSHION ASSY., rear (Scarlet)	2	L90-106956		
2	52401-028-000	METAL, upper, rear cushion	2	L90-106956		
3	52407-056-020	SPRING, rear cushion	2	L90-106956		
4	52420-028-000	METAL, bottom, rear cushion	2	L90-106956		
5	52441-028-000	COLLAR, rear cushion setting	2	L90-106956		
6	52459-056-000	COLLAR, rear cushion spring	2	L90-106956		
7	52460-028-000B	CASE, upper, rear cushion (Black)	2	L90-106956		
	52460-028-000C	CASE, upper, rear cushion (Scarlet)	2	L90-106956		
8	52465-028-000	CASE, under, rear cushion	2	L90-106956		
9	52475-056-000	RUBBER, rear cushion stopper	2	L90-106956		
10	52476-028-000	GUIDE, rear cushion spring	2	L90-106956		
11	52482-028-020	NUT, rear cushion locking	2	L90-106956		
12	52486-056-000	COLLAR, rear cushion rubber bush	4	L90-106956		
13	52489-056-000	BUSH, rubber, rear cushion	4	L90-106956		
14	90120-056-010	BOLT, rear, muffler setting	1	L90-106956		
15	94021-10000	NUT, blind, 10 mm	3			
16	94101-10000	WASHER, flat, 10 mm	6			

Ref. No.	Part No.	Description	No. Reqd.	No. Used on From	No. Used on To	News No.
1	42701-028-000	RIM, rear wheel	1	L90-106956		
2	44301-229-000	AXLE, front wheel	1	L90-106956		
3	44311-229-000	COLLAR, side, front wheel	1	L90-106956		
4	44601-028-000	HUB, front wheel	1	L90-106956		
5	44620-030-000	COLLAR, front axle distance	1	L90-106956		
6	44711-028-000	TIRE, front wheel	1	L90-106956		
7	44712-216-000	TUBE, wheel	1	L90-106956		
8	44713-205-000	BAND, rim	1	L90-106956		
9	44806-028-000	GEAR, speedometer	1	L90-106956		
10	44830-028-000	CABLE, speedometer	1	L90-106956		
11	44831-028-000	CABLE, inner, speedometer	1	L90-106956		
12	45100-028-000	PANEL, front brake	1	L90-106956		
13	45120-001-010	SHOE, brake	2	L90-106956		
14	45131-030-000	CAM, front brake	1	L90-106956		
15	45133-001-010	SPRING, brake shoe	2	L90-106956		
16	45410-028-000	ARM, front brake	1	L90-106956		
17	45436-001-000	NUT, front brake arm	1	L90-106956		
18	90305-001-000	NUT, axle	1	L90-106956		
19	90525-001-000	WASHER, brake arm	1	L90-106956		
20	90755-229-000	OIL-SEAL, 21377	1	L90-106956		
21	91251-030-000	OIL-SEAL, 147587	1	L90-106956		
22	92000-06025	BOLT, hex., 6×25	1			
23	96140-63010	BEARING, ball, 6301R	2			
24	97142-212301	SPOKE A, front	18			
25	97493-212291	SPOKE B, front	18			

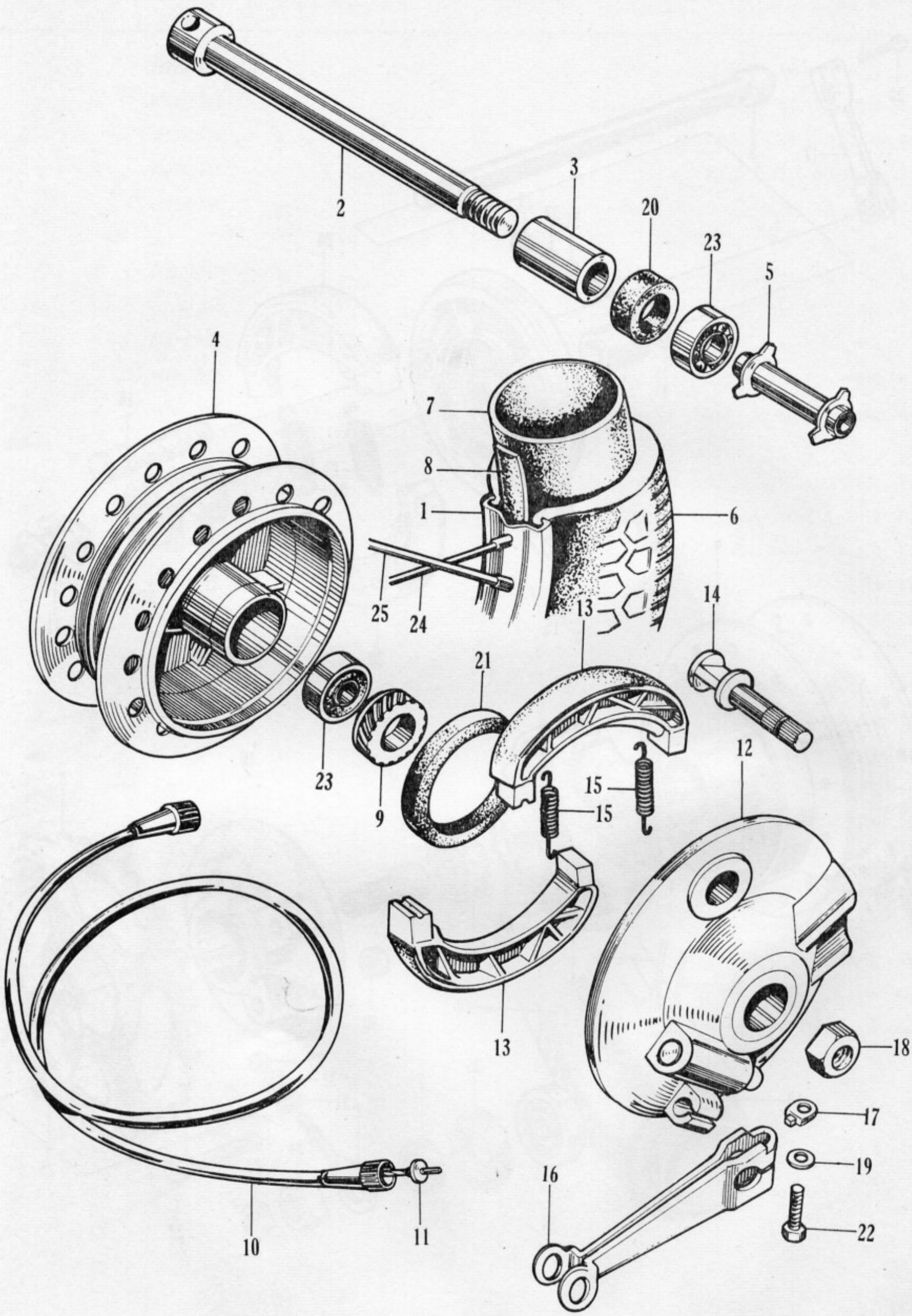
2
3
20
23
5
4
7
8
1
6
25
24
13
14
21
23
9
15
15
12
13
18
17
19
16
22
10
11

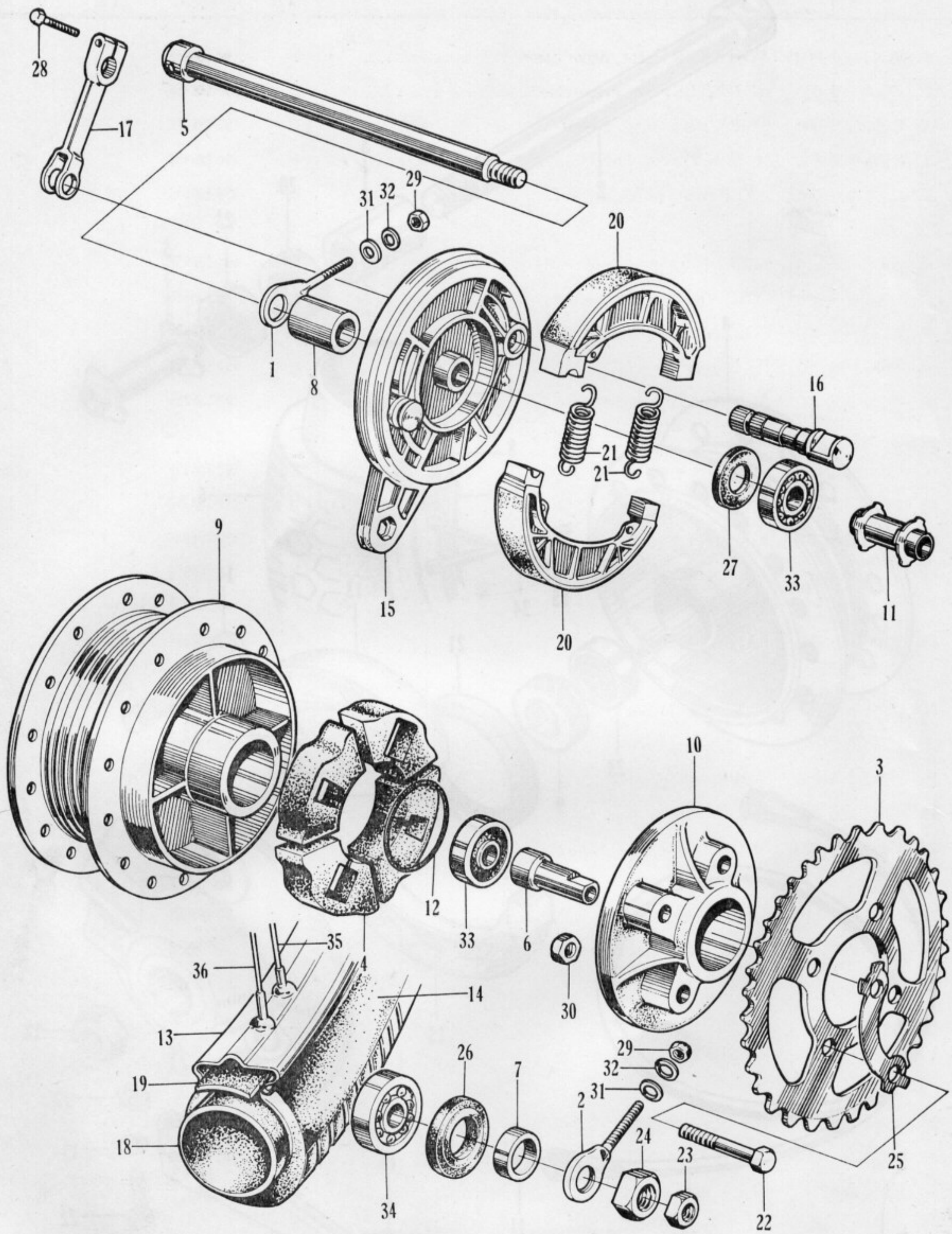
28
17
5
29
31
32
20
1
8
16
21
21
27
33
11
9
15
20
10
3
12
33
6
30
35
36
4
14
13
19
18
26
7
29
32
31
2
24
23
25
34
22

F-13 Rear Wheel

Ref. No.	Part No.	Description	No. Reqd.	No. Used on From	No. Used on To	News No.
1	40543-001-000	ADJUSTER, right, drive chain	1	L90-106956		
2	40544-028-000	ADJUSTER, left, drive chain	1	L90-106956		
3	41201-028-000	SPROCKET, final driven	1	L90-106956		
4	41241-229-000	DAMPER, rear wheel	4	L90-106956		
5	42301-028-010	AXLE, rear wheel	1	L90-106956		
6	42303-028-010	SLEEVE, rear axle	1	L90-106956		
7	42304-028-010	COLLAR, rear axle sleeve	1	L90-106956		
8	42313-028-000	COLLAR, side, rear brake panel	1	L90-106956		
9	42601-028-000	HUB, rear wheel	1	L90-106956		
10	42610-028-000	FLANGE, final drive	1	L90-106956		
11	42620-001-010	COLLAR, rear axle distance	1	L90-106956		
12	42653-001-000	O RING, 40.5×3	1	L90-106956		
13	42701-028-010	RIM, rear wheel	1	L90-106956		
14	42711-056-000	TIRE, rear wheel	1	L90-106956		
	42711-056-810	TIRE, rear wheel	1	L90-106956		
15	43100-028-000	PANEL, rear brake	1	L90-106956		
16	43141-001-000	CAM, rear brake	1	L90-106956		
17	43410-028-000	ARM, rear brake	1	L90-106956		
18	44712-216-000	TUBE, wheel	1	L90-106956		
19	44713-205-000	BAND, rim	1	L90-106956		
20	45120-001-000	SHOE, brake	2	L90-106956		
21	45133-001-010	SPRING, brake shoe	2	L90-106956		
22	90128-001-030	BOLT, driven sprocket setting	4	L90-106956		
23	90305-001-000	NUT, axle	1	L90-106956		
24	90307-001-000	NUT, rear axle sleeve	1	L90-106956		
25	90522-001-000	WASHER, tongued, 8 mm	2	L90-106956		
26	90753-028-010	OIL-SEAL, 27406	1	L90-106956		
27	91254-001-000	OIL-SEAL, 18377	1	L90-106956		
28	92000-06022	BOLT, hex., 6×22	1			
29	94001-06000	NUT, hex., 6 mm	2			
30	94002-08000	NUT, thin, 8 mm	4			

Ref. No.	Part No.	Description	No. Reqd.	No. Used on From	No. Used on To	News No.
31	94101-06000	WASHER, flat, 6 mm	2			
32	94111-06000	WASHER, spring, 6 mm	2			
33	97100-63010	BEARING, ball, 6301	2			
34	96120-62030	BEARING, ball, 6203Z	1			
35	97252-422301	SPOKE A, rear	18			
36	97604-422271	SPOKE B, rear	18			

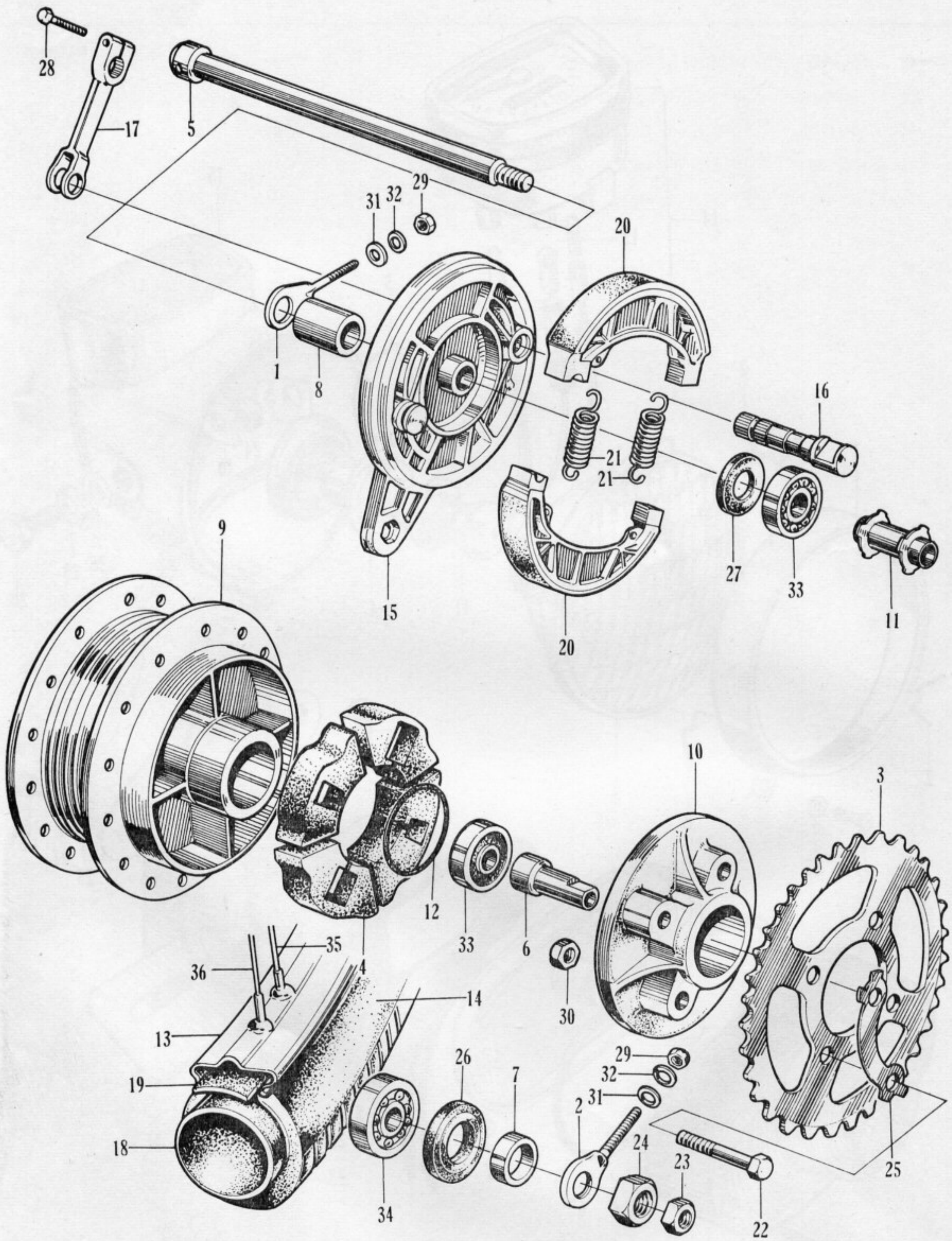
28
17
5
29
31
32
20
1
8
16
21
21
9
15
20
27
33
11
10
3
12
33
6
35
36
4
14
30
13
26
29
32
19
7
31
2
24
23
18
34
25
22

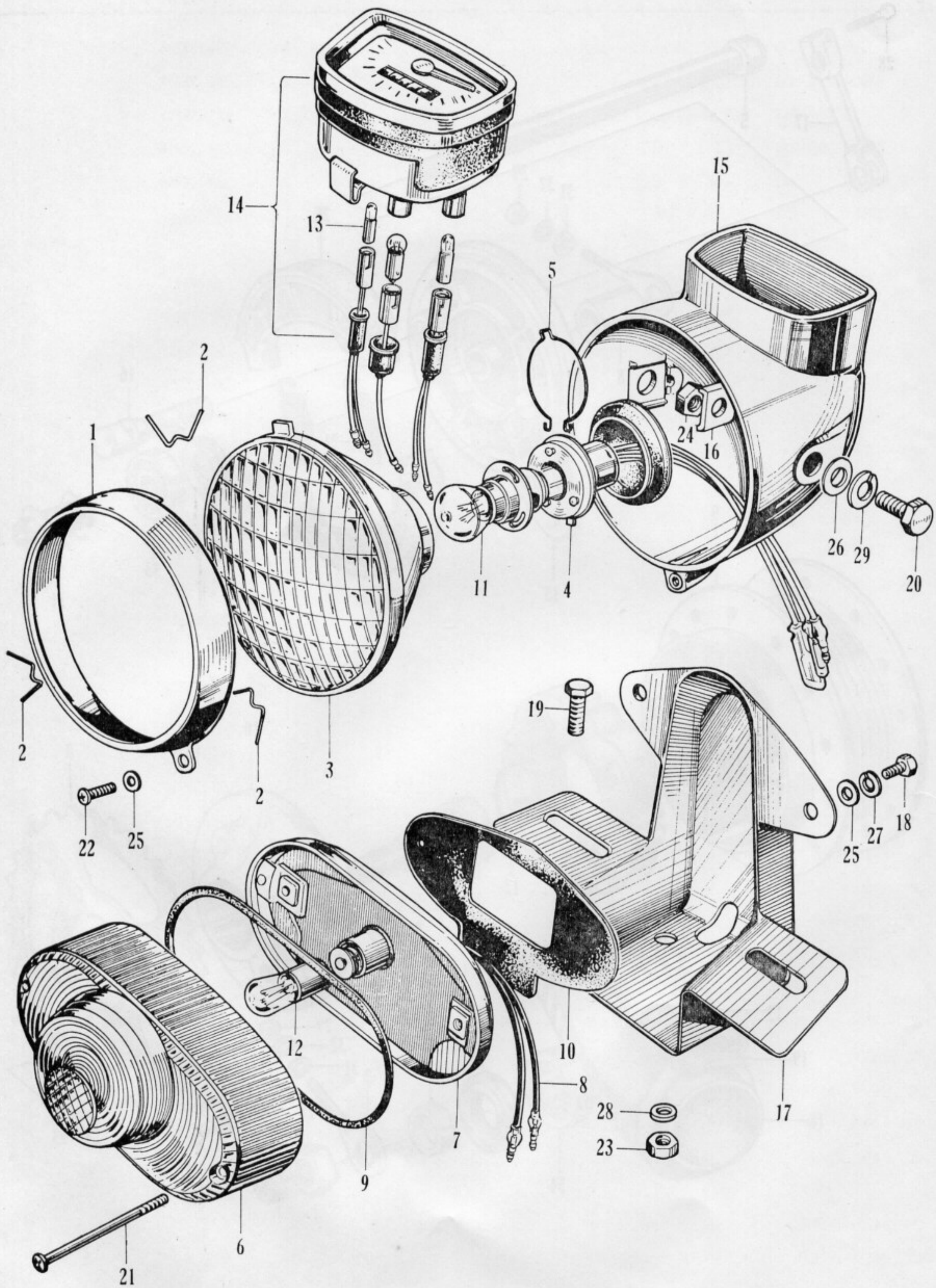
14
13
15
5
2
1
24
16
26
29
20
11
4
2
3
2
19
22
25
25
27
18
12
10
8
28
23
17
7
9
6
21

F-14 Head Light · Tail Light

Ref. No.	Part No.	Description	No. Reqd.	No. Used on From	No. Used on To	News No.
	33100-229-000	LIGHT ASSY., head	1	L90-106956		
1	33101-229-003	RIM, head light	1	L90-106956		
2	33115-229-003	SPRING, head light setting	3	L90-106956		
3	33120-216-003	LIGHT UNIT, head	1	L90-106956		
4	33130-229-003	SOCKET, head light	1	L90-106956		
5	33154-200-003	SUPPORTER, socket	1	L90-106956		
	33700-028-681	LIGHT ASSY., tail	1	L90-106956		
6	33701-041-000	LENS, tail light	1	L90-106956		
7	33703-041-000	SOCKET, tail light	1	L90-106956		
8	33707-041-000	CORD, tail light	1	L90-106956		
9	33709-041-000	PACKING, lens	1	L90-106956		
10	33719-041-300	PACKING, tail light base	1	L90-106956		
11	34901-229-000	BULB, head light	1	L90-106956		
12	34906-041-670	BULB, tail & stop light	1	L90-106956		
13	34908-001-000	BULB, speedometer	3	L90-106956		
14	37200-056-681	SPEEDOMETER ASSY.,	1	L90-106956		
15	61301-229-010B	CASE, head light (Black)	1	L90-106956		
	61301-229-010C	CASE, head light (Scarlet)	1	L90-106956		
16	61303-229-000	WASHER, head light case	2	L90-106956		
17	84701-028-010B	BRACKET, number plate (Black)	1	L90-106956		
	84701-028-010C	BRACKET, number plate (Scarlet)	1	L90-106956		
	84701-028-010Z	BRACKET, number plate (Non sanding)	1	L90-106956		
18	92000-0501240	BOLT, hex., 5×12	2			
19	92000-06012	BOLT, hex., 6×12	2			
20	92000-0802202	BOLT, hex., 8×22	2			
21	93500-0404502	SCREW, cross., 4×45	2			
22	93500-0501202	SCREW, cross., 5×12	1			
23	94001-06000	NUT, hex., 6 mm	2			
24	94001-08000	NUT, hex., 8 mm	2			
25	94101-05000	WASHER, flat, 5 mm	3			
26	94101-08000	WASHER, flat, 8 mm	2			
27	94111-05000	WASHER, spring, 5 mm	2			

Ref. No.	Part No.	Description	No. Reqd.	No. Used on From	No. Used on To	News No.
28	94111-06000	WASHER, spring, 6mm	2			
29	94111-08000	WASHER, spring, 8 mm	2			

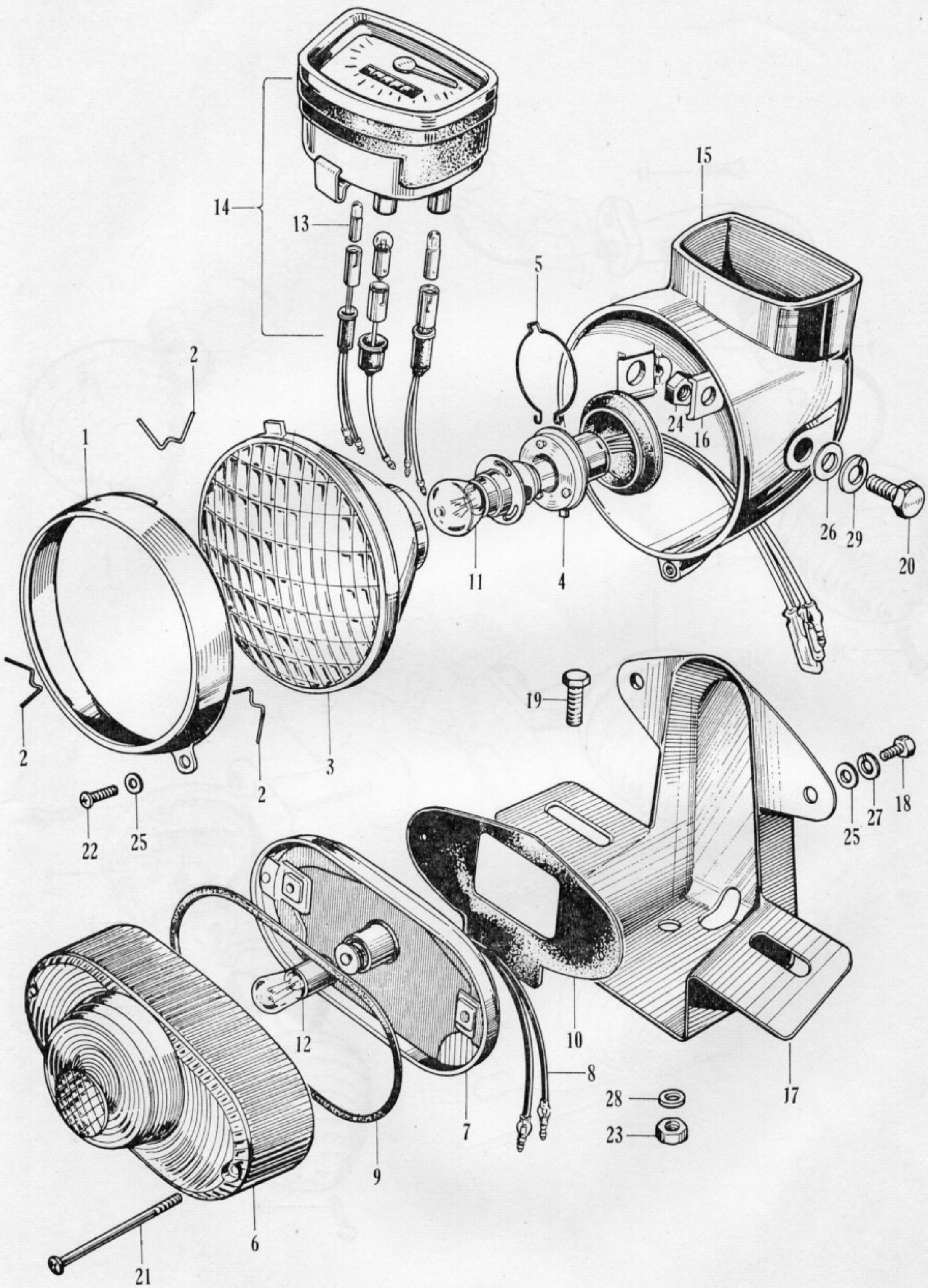
14
13
15
5
2
1
24
16
26
29
20
11
4
2
3
2
19
22
25
25
27
18
12
10
8
17
7
28
23
9
6
21

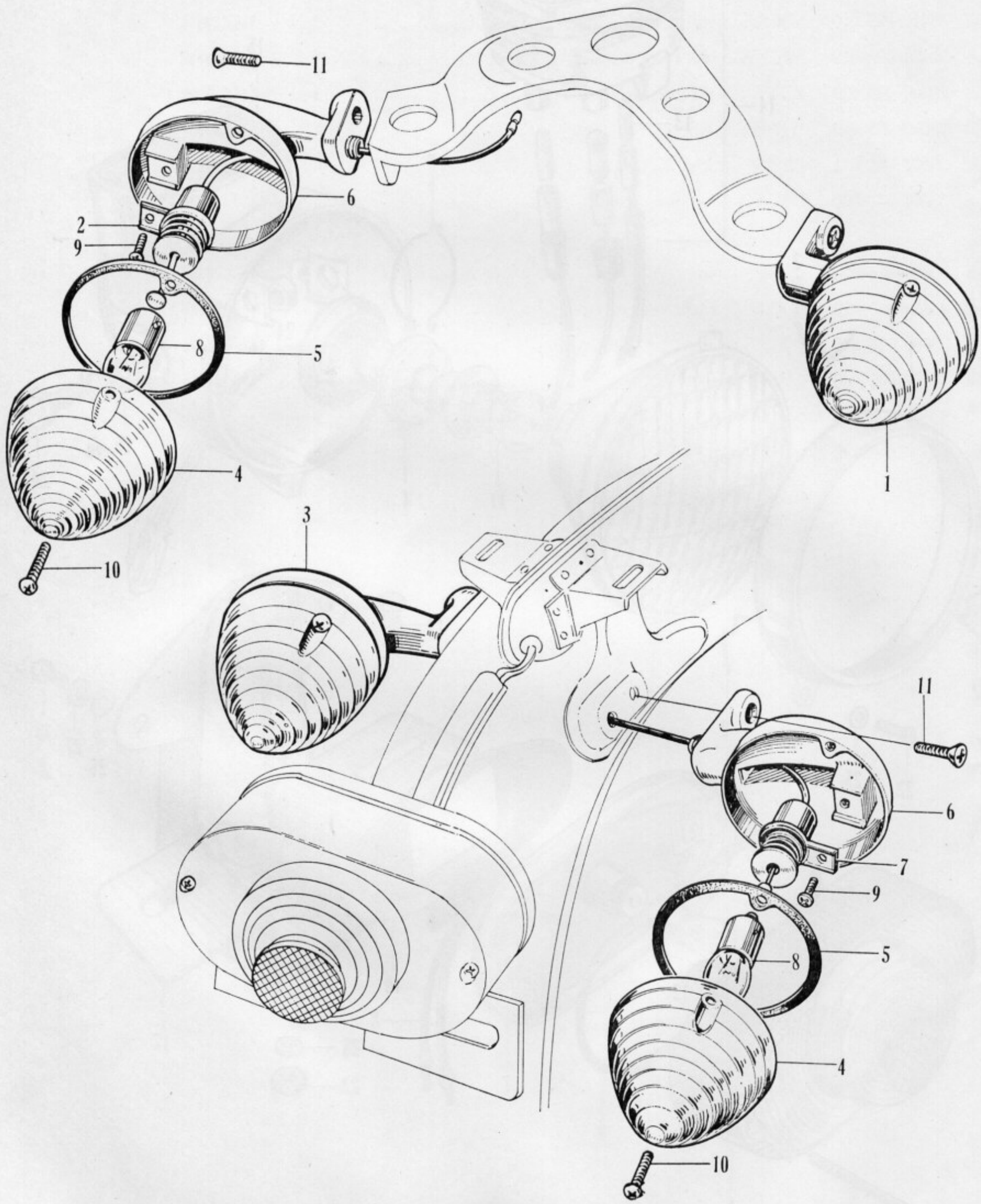
11
6
2
9
8
5
4
10
3
1
11
6
7
9
8
5
4
10

F-15 Winker

Ref. No.	Part No.	Description	No. Reqd.	No. Used on From	No. Used on To	News No.
	33400-028-010	WINKER ASSY., right front	1	L90-106956		
1	33450-028-010	WINKER, ASSY., left front	1	L90-106956		
2	33410-028-010	SOCKET, right front winker	1	L90-106956		
	33453-028-010	SOCKET, left front winker	1	L90-106956		
	33600-028-010	WINKER ASSY., right rear	1	L90-106956		
3	33650-028-010	WINKER ASSY., left rear	1	L90-106956		
4	33602-041-671	LENS, winker	4	L90-106956		
5	33604-041-000	PACKING, winker lens	4	L90-106956		
6	33605-056-000	BASE, winker	4	L90-106956		
7	33610-028-010	SOCKET, right rear winker	1	L90-106956		
	33660-028-010	SOCKET, left rear winker	1	L90-106956		
8	34905-035-000	BULB, winker	4	L90-106956		
9	93500-04006	SCREW, cross., 4×6	4			
10	93500-0501202	SCREW, cross., 5×12	8			
11	93700-05018	SCREW, cross., 5×18	4			

F-16 Winker Switch·Dimmer Switch

Ref. No.	Part No.	Description	No. Reqd.	No. Used on From	No. Used on To	News No.
1	35250-056-000	SWITCH ASSY., horn button & winker	1	L90-106956		
2	35300-056-020	SWITCH ASSY., dimmer	1	L90-106956		
3	35317-028-300	KNOB, horn button switch.....	2	L90-106956		
4	35317-259-300	BUTTON, horn button switch push	1	L90-106956		
5	35318-259-000	SPRING, push button	1	L90-106956		
6	53163-271-000	ADJUSTER, throttle grip	1	L90-106956		
7	88110-028-000	MIRROR, back, right	1	L90-106956		
8	88120-028-810	MIRROR, back, left	1	L90-106956		
9	93500-05024	SCREW, cross., 5×24	4			

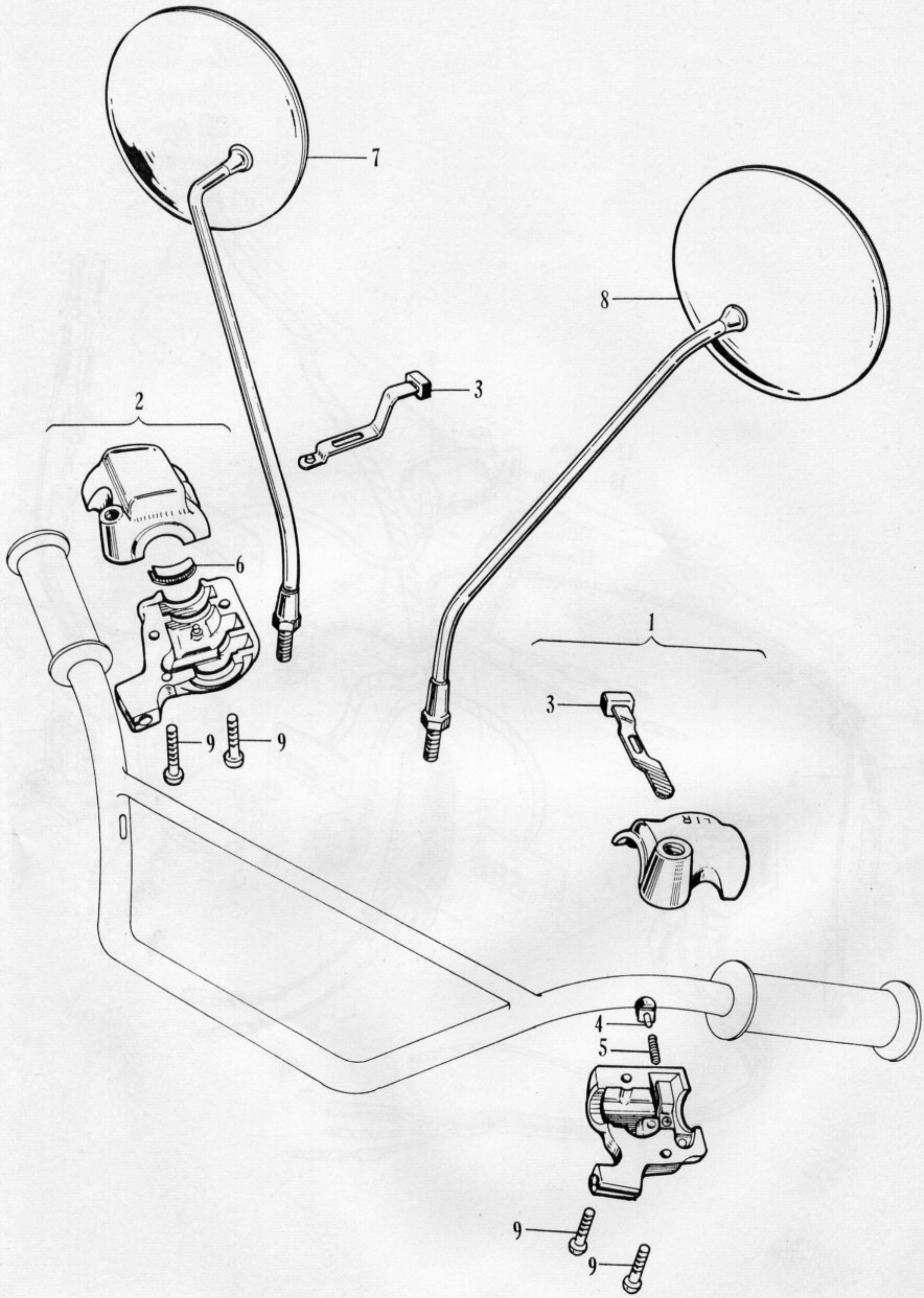
7
8
3
2
6
1
3
9
9
L R
4
5
9
9

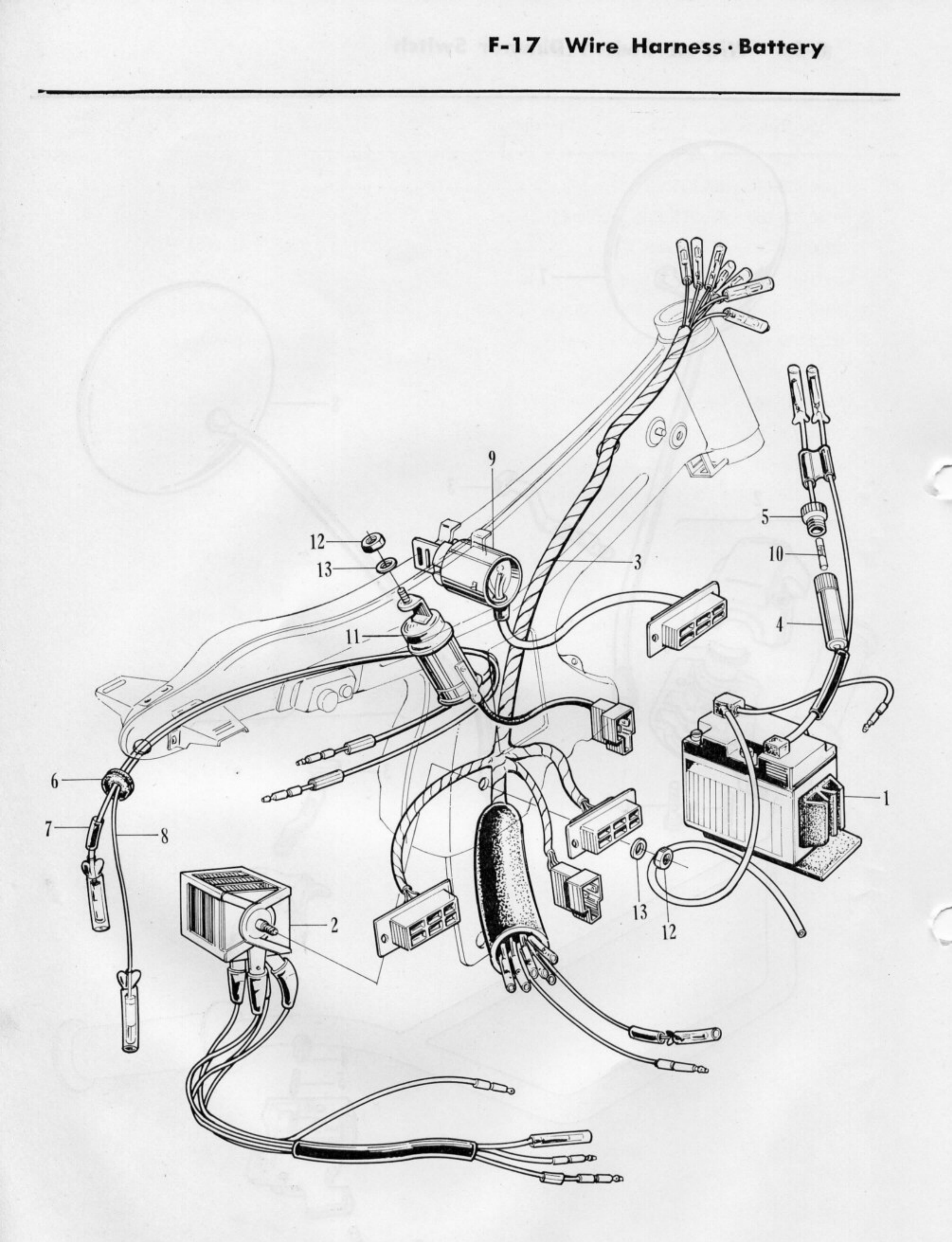
9
12
13
11
3
5
10
4
6
7
8
1
2
13
12

F-17 Wire Harness·Battery

Ref. No.	Part No.	Description	No. Reqd.	No. Used on From	No. Used on To	News No.
1	31500-028-010	BATTERY	1	L90-106956		
2	31700-028-000	RECTIFIER, selenium	1	L90-106956		
3	32100-028-040	HARNESS, wire	1	L90-106956		
	32111-028-305	CONNECTOR ASSY., fuse	1	L90-106956		
4	32106-253-010	CONNECTOR B, fuse	1	L90-106956		
5	32112-253-010	CONNECTOR A, fuse	1	L90-106956		
6	32982-011-000	GROMMET, tail light cord	1	L90-106956		
7	33711-028-000	CORD, sub, tail light	1	L90-106956		
8	33713-028-000	CORD, sub, stop light	1	L90-106956		
9	35100-028-010	SWITCH ASSY., combination	1	L90-106956		
	35010-028-010	SWITCH KIT, combination	1	L90-106956		
10	38201-030-000	FUSE (10A)	1	L90-106956		
11	38300-028-030	RELAY, winker	1	L90-106956		
12	94001-06000	NUT, hex., 6 mm	2			
13	94101-06000	WASHER, flat, 6 mm	2			

PART NO. INDEX

Part No.	Page
11000 Parts	
11100-028-090	11
11191-028-040	11
11200-028-110	11
11330-056-000	19
11341-028-030	24
11361-028-040	24
11393-028-020	19
11394-028-020	24
11431-028-000	24
11650-028-010	19
11661-028-010	24
11691-028-000	24
11692-028-000	19
11911-056-810	40
12000 Parts	
12021-028-340	7
12023-028-330	7
12100-028-120	3
12191-028-020	3
12200-028-090	3
12251-028-030	3
12261-028-000	3
12301-028-000	3
12331-028-010	3
12332-028-010	27
12361-028-000	3
12391-028-000	3
12394-028-010	3
12901-028-020	3
12902-028-020	3
13000 Parts	
13000-028-030	4
13010-028-020	4
13020-028-020	4
13030-028-020	4
13040-028-020	4
13050-028-020	4
13101-028-050	4
13102-028-050	4
13103-028-050	4
13104-028-050	4
13105-028-050	4
13111-221-000	4
13115-200-000	4
13201-216-000	4
13211-028-000	4
13310-028-060	4
13321-028-060	4
13381-028-000	4
14000 Parts	
14101-028-000	7
14311-028-010	4
14321-028-000	8
14401-028-000	8
14431-028-010	7
14451-028-010	7
14500-028-000	8
14541-028-020	8
14552-028-020	8
14561-028-010	8
14565-028-000	8
14591-035-000	8
14592-028-010	8
14593-028-010	8
14610-028-010	8
14615-028-010	8
14670-028-000	8
14711-028-000	7
14721-028-600	7
14730-028-000	7
14731-028-000	7
14751-028-010	7
14761-028-020	7
14771-030-000	7
14775-028-010	7
14776-028-000	7
14781-001-010	7
15000 Parts	
15119-028-010	19
15121-028-030	19
15128-028-010	19
15141-028-020	19
15161-028-020	19
15180-028-030	19

PART NO. INDEX

Part No.	Page
15210-028-030	19
15416-028-000	11
15421-035-010	11
15439-028-000	11
15510-028-000	19
15619-001-000	19
15650-056-000	19
16000 Parts	
16100-056-010	28
16111-202-004	28
16118-028-004	28
16119-028-004	28
16122-056-004	28
16125-056-004	28
16126-011-004	28
16133-202-004	28
16139-056-004	28
16141-056-004	28
16151-056-004	28
16156-202-004	28
16157-259-004	28
16162-202-004	28
16163-056-004	28
16164-202-004	28
16171-202-004	28
16172-030-004	28
16176-001-004	28
16181-202-004	28
16182-001-004	28
16185-202-004	28
16187-201-004	28
16188-044-004	28
16189-056-004	28
16194-028-004	28
16201-028-000	3
16211-028-000	3
16212-046-000	3
16950-028-000	39
16951-028-000	39
16952-028-000	39
16957-028-000	39
16958-028-000	39
16993-011-000	39

Part No.	Page
17000 Parts	
17111-056-000	3
17119-046-000	3
17211-028-030	43
17221-028-040B	43
17221-028-040Z	43
17221-028-040C	43
17231-028-050XL	43
17235-028-000	43
17251-028-020XL	43
17253-028-010	43
17255-028-000	43
17256-028-000	43
17500-056-020S	39
17602-028-000	39
17611-028-000	39
17613-056-000	39
17620-259-000	39
17631-259-000	39
17661-223-000	39
17662-223-000	39
17910-028-830	32
17911-023-000	32
18000 Parts	
18230-056-000	47
18231-028-000	47
18271-056-000	47
18291-028-000	47
18292-254-000	47
18293-035-000	47
18300-056-040	47
18301-028-000	47
18353-056-010	47
18381-056-000	47
22000 Parts	
22101-028-010	12
22111-028-010	12
22112-028-000	12
22115-030-000	12
22131-030-000	12
22201-030-030	12
22311-030-000	12

PART NO. INDEX

Part No.	Page
22321-030-000	12
22401-030-000	12
22421-001-000	12
22511-028-000	12
22810-028-000	19
22815-030-010	19
22831-028-000	12
22834-030-000	19
22870-056-000	32
22875-030-000	19
22901-028-000	12
22911-028-000	4
23000 Parts	
23110-028-000	12
23111-030-000	12
23211-028-030	15
23221-052-000	15
23421-028-000	15
23431-052-000	15
23441-052-010	15
23451-052-000	15
23461-052-000	15
23471-052-000	15
23801-028-000	15
23811-206-000	15
24000 Parts	
24211-028-040	23
24221-028-030	23
24261-028-010	23
24263-028-000	23
24301-028-604	23
24421-200-000	23
24423-028-000	23
24430-028-601	16
24434-028-601	23
24435-001-020	16
24438-205-000	24
24610-028-010	16
24641-028-000	16
24651-028-000	16
24652-028-000	16
24700-028-670	24
25000 Parts	
25551-028-000	12
25555-028-000	12
28000 Parts	
28211-028-000	16
28214-030-000	16
28222-030-000	16
28224-028-000	16
28251-028-000	16
28261-028-000	16
28300-056-000	19
28301-028-000	19
28302-001-000	19
28303-001-000	19
28311-200-000	19
28322-001-000	19
28324-001-000	19
30000 Parts	
30200-028-003	27
30200-028-004	27
30202-028-003	27
30202-216-004	27
30220-028-000	27
30250-028-000	27
30360-028-000	27
30362-028-000	27
30370-028-000	27
30391-028-000	27
30392-028-010	27
30400-028-013	27
30400-028-014	27
30700-259-600	27
30905-216-000	7,27
31000 Parts	
31100-028-030	24
31101-028-033	24
31101-028-034	24
31102-028-033	24
31102-028-034	24
31500-028-010	71
31700-028-000	71

PART NO. INDEX

Part No.	Page
32000 Parts	
32100-028-040	71
32106-253-010	71
32111-028-305	71
32112-253-010	71
32901-028-000	27
32971-028-000	24
32981-028-010	23
32982-011-000	71
33000 Parts	
33100-229-000	63
33101-229-003	63
33115-229-003	63
33120-216-003	63
33130-229-003	63
33154-200-003	63
33400-028-010	67
33410-028-010	67
33450-028-010	67
33453-028-010	67
33600-028-010	67
33602-041-671	67
33604-041-000	67
33605-056-000	67
33610-028-010	67
33650-028-010	67
33660-028-010	67
33700-028-681	63
33701-041-000	63
33703-041-000	63
33707-041-000	63
33709-041-000	63
33711-028-000	71
33713-028-000	71
33719-041-300	63
34000 Parts	
34901-229-000	63
34905-035-000	67
34906-041-670	63
34908-001-000	63

Part No.	Page
35000 Parts	
35010-028-010	71
35100-028-010	71
35250-056-000	68
35300-056-020	68
35317-028-300	68
35317-259-300	68
35318-259-000	68
35350-028-000	44
35357-028-010	44
35750-028-000	23
35753-028-010	23
37000 Parts	
37200-056-681	63
37551-001-000	23
38000 Parts	
38100-056-000	36
38201-030-000	71
38300-028-030	71
40000 Parts	
40510-028-010B	51
40510-028-010C	51
40510-028-010Z	51
40530-028-005	51
40530-028-003	51
40531-028-005	51
40531-205-003	51
40543-001-000	59
40544-028-000	59
41000 Parts	
41201-028-000	59
41241-229-000	59
42000 Parts	
42301-028-010	59
42303-028-010	59
42304-028-010	59
42313-028-000	59
42601-028-000	59
42610-028-000	59

PART NO. INDEX

Part No.	Page
42620-001-010	59
42653-001-000	59
42701-028-000	56
42701-028-010	59
42711-056-000	59
42711-056-810	59
43000 Parts	
43100-028-000	59
43141-001-000	59
43410-028-000	59
43432-028-010	51
43451-028-000	44
43472-001-000	44
44000 Parts	
44301-229-000	56
44311-229-000	56
44601-028-000	56
44620-030-000	56
44711-028-000	56
44712-216-000	56, 59
44713-205-000	56, 59
44806-028-000	56
44830-028-000	56
44831-028-000	56
45000 Parts	
45100-028-000	56
45120-001-010	56, 59
45131-030-000	56
45133-001-010	56, 59
45410-028-000	56
45436-001-000	56
45437-001-000	32
45450-056-000	32
45461-001-000	32, 44
45462-001-000	32, 44
45465-028-000	36
45465-270-000	32
45470-056-000	36
46000 Parts	
46500-056-000	44
46514-028-000	44

Part No.	Page
50000 Parts	
50100-056-010B	40
50100-056-010C	40
50100-056-010Z	40
50301-030-305	40
50302-001-305	40
50500-056-000B	44
50522-028-010	44
50523-028-000	44
50524-011-000	44
50526-028-010	44
50528-028-000	44
50600-056-010B	44
50661-283-010	44
50701-024-010	51
50705-024-000	51
50712-024-000	51
50715-024-000	51
51000 Parts	
51400-056-000S	35
51401-028-000	35
51407-229-000	35
51409-028-000	35
51410-056-000	35
51420-056-000S	35
51430-056-000	35
51438-028-000	35
51442-229-000	35
51445-028-000	35
51446-028-000	35
51447-028-000	35
51451-028-010	35
51493-273-000	35
51500-056-000S	35
51520-056-000S	35
51602-056-000B	35
51602-056-000C	35
51602-056-000Z	35
51606-056-000B	35
51606-056-000C	35
51606-056-000Z	35
51608-028-000	35
51611-056-000	35

PART NO. INDEX

Part No.	Page
51624-028-000	35
52000 Parts	
52100-056-000B	51
52100-056-000C	51
52100-056-000Z	51
52108-028-000	51
52400-056-000B	55
52400-056-000C	55
52401-028-000	55
52407-056-020	55
52420-028-000	55
52441-028-000	55
52459-056-000	55
52460-028-000B	55
52460-028-000C	55
52465-028-000	55
52475-056-000	55
52476-028-000	55
52482-028-020	55
52486-056-000	55
52489-056-000	55
53000 Parts	
53100-056-010	32
53131-011-000	32
53132-056-000	32
53135-028-000	32
53141-271-000	32
53161-250-000	32
53162-056-000	32
53163-271-000	68
53165-056-000	32
53166-283-000	32
53175-028-670	32
53178-028-010	32
53180-028-670	32
53192-030-000	32
53200-028-000B	36
53200-028-000C	36
53200-028-000Z	36
53211-028-305	36
53212-030-305	36
53214-001-010	36
53215-001-000	36
53220-028-000	36
53231-028-010	32, 36
61000 Parts	
61100-056-680S	36
61301-229-010B	63
61301-229-010C	63
61303-229-000	63
77000 Parts	
77200-229-000A	43
77201-051-000	43
80000 Parts	
80100-056-020S	51
80105-028-000	51
80106-229-000	51
80108-028-000	51
83000 Parts	
83600-028-020B	40
83600-028-020C	40
83600-028-020Z	40
84000 Parts	
84701-028-010B	63
84701-028-010C	63
84701-028-010Z	63
87000 Parts	
87121-056-000	39
87122-056-000	39
87125-253-680	40
87141-202-000	
88000 Parts	
88110-028-000	68
88120-028-810	68
89000 Parts	
89010-028-000	48
89101-028-010	48
89204-028-000	43
89211-001-000	48
89211-028-000	43

PART NO. INDEX

Part No.	Page
89212-001-000	48
89214-001-000	48
89216-264-000	48
90000 Parts	
90009-028-000	8
90012-200-000	7
90015-028-000	19
90023-028-600	16
90031-028-010	11
90032-028-010	11
90081-035-000	8
90112-028-000	40
90114-028-000	32
90120-056-010	47,55
90121-028-020	51
90123-273-000	35
90127-001-010	51
90128-001-030	59
90133-028-010	51
90161-028-000	43
90162-229-000	51
90164-028-000	36
90206-001-000	7
90231-030-000	12
90301-028-000	43
90304-011-000	32
90305-001-000	56,59
90307-001-000	59
90308-028-000	51
90321-268-000	32
90405-001-000	19
90407-200-000	11
90417-001-000	23
90431-030-000	12
90441-028-010	27
90441-035-000	8
90441-259-000	3
90451-001-000	15,16
90461-028-000	15
90482-028-000	27
90483-028-000	3
90503-011-000	32
90504-700-000	51
90506-273-000	35
90521-028-000	44
90522-001-000	59
90522-034-000	51
90525-001-000	56
90528-229-000	35
90543-273-000	35
90554-028-000	51
90601-030-000	15
90701-028-000	19
90741-253-000	4
90753-028-010	59
90755-229-000	56
90811-030-000	4
91000 Parts	
91101-001-030	4
91201-030-000	11
91203-001-000	24
91203-023-020	19
91251-030-000	56
91254-001-000	59
91301-028-000	3
91301-216-000	24
91302-028-000	3
91303-028-000	8
91304-028-000	3,8

MEMO

HONDA MOTOR CO., LTD.

PRINTED IN JAPAN
'67 2. Ⓨ-A 3,000